YZ-4 SF SETTING SHEET Ver.01

DRIVER *Ryan Maifield*

DATE *May 2019*

CIRCUIT *Tacoma R/C Raceway*

●INDOOR ○OUTDOOR
●DIRT ○ASTROTURF ○CARPET ○GRASS ○WOOD
●WET ●DRY ●DUSTY ●SMOOTH ○BUMPY
●HARD PACKED ●CLAY ○BLUE GROOVE ○ _____
○LOW TRACTION ●MED TRACTION ●HIGH TRACTION

FRONT

◆CAMBER ●↔○ *2* °

◆TOE ○IN ●OUT *1* °

◆RIDE HEIGHT *19* mm

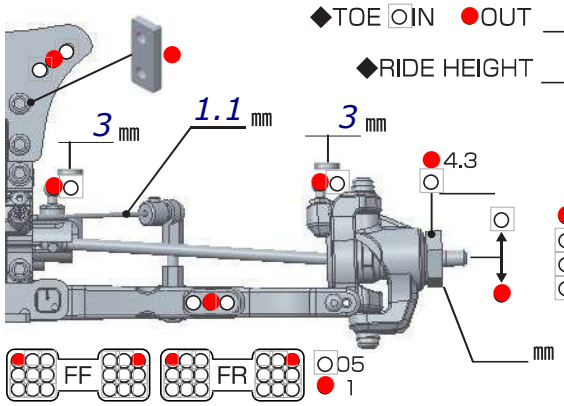

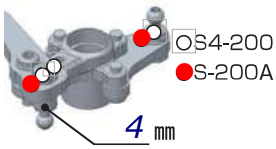

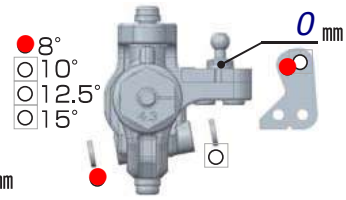

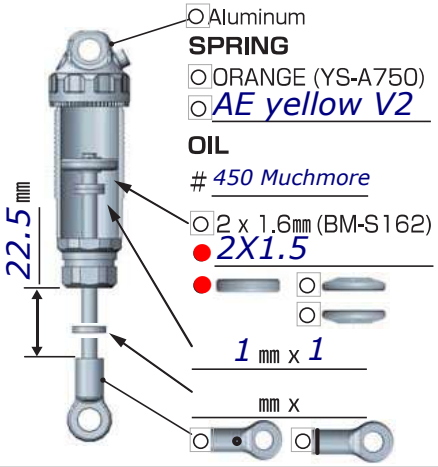

REAR

◆CAMBER ●↔○ *2* °

◆RIDE HEIGHT *19* mm

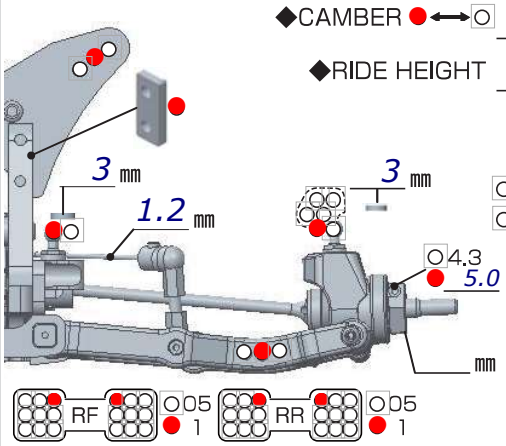

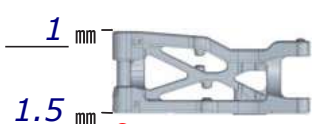

○Z2-415R
○Z2-415R00 (Aluminum)

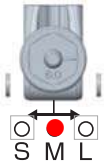

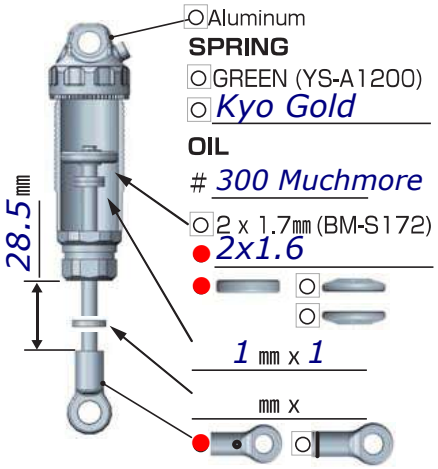

DRIVE

F/# *10,000*
2 grs
R/# *10,000*
2 grs

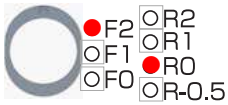

_____

MOTOR ➪ *Orion 5.5* Rotor mm

GEAR ➪ Spur *84*T / Pinion *20* T : ○2.5 / ○2.35

BATTERY ➪ *Orion 4000*

ESC ○YOKOMO RPX ○YOKOMO BL-PRO4

○*Orion HMX*

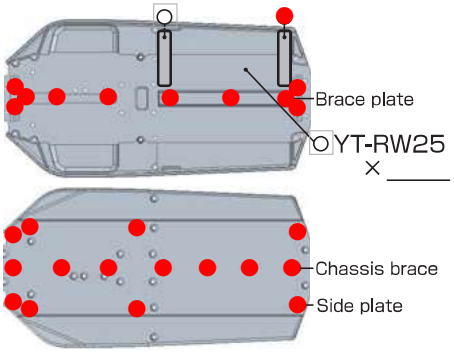

TIRE

FRONT

TIRE ➪ *Jconcepts Dirt Web (Gold)*

INSERTS ➪ *Standard*

WHEELS ➪ *Jconcepts*

REAR

TIRE ➪ *Jconcepts Ellipse (Gold)*

INSERTS ➪ *Standard*

WHEELS ➪ *Jconcepts*

OTHER

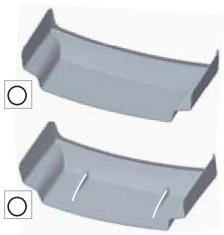

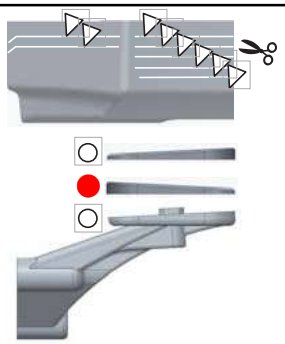

○ _____

Muchmore Shock and Diff Oil, 10 grams behind motor, Protek 160T servo, aluminum caster block and rear hub.

**Shortest Shock End used for Front Shocks.*

COMMENT

PetitRC.com ArnO