YZ-4 SF SETTING SHEET Ver.01

DRIVER: Ryan Maifield

DATE: JAN/13/2019

CIRCUIT: CRCRC - The Ohio RC Factory

●INDOOR ○OUTDOOR
●DIRT ○ASTROTURF ●CARPET ○GRASS ○WOOD
○WET ●DRY ○DUSTY ○SMOOTH ●BUMPY
●HARD PACKED ○CLAY ○BLUE GROOVE ○
○LOW TRACTION ○MED TRACTION ●HIGH TRACTION

FRONT

◆CAMBER ●↔○ 2°

◆TOE ○IN ○OUT 21mm °

◆RIDE HEIGHT 18 mm

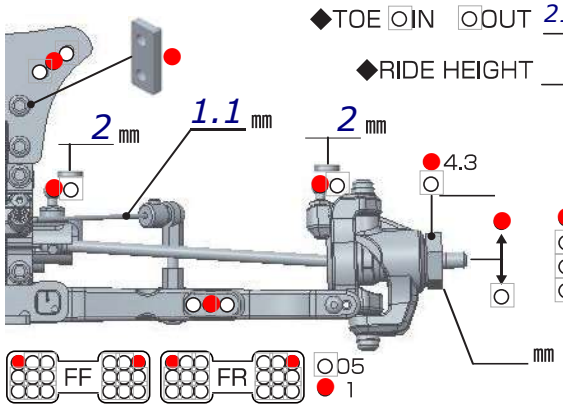

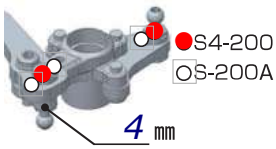

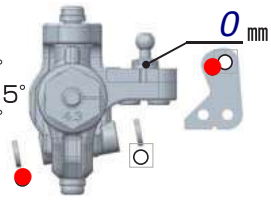

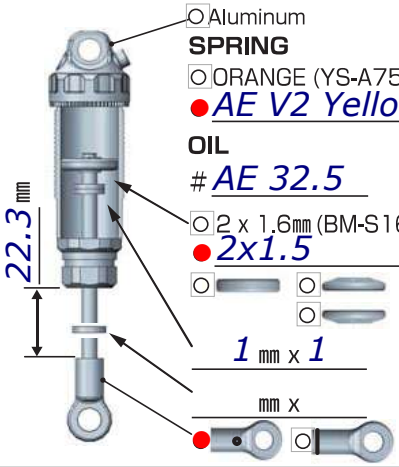

REAR

◆CAMBER ●↔○ 2°

◆RIDE HEIGHT 19 mm

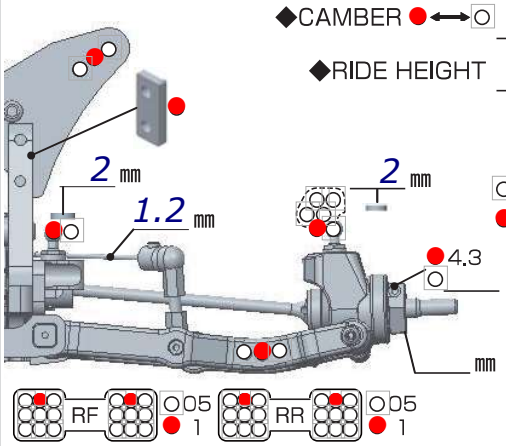

1 mm

1 mm

●S4-008RL5
○

○Z2-415R
●Z2-415R00 (Aluminum)

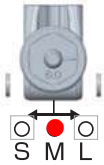

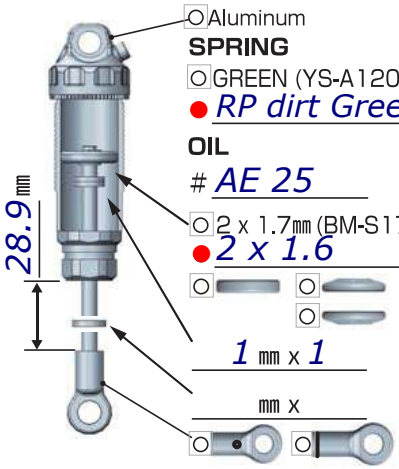

DRIVE

F/# 5K
4 grs

R/# 5K
4 grs

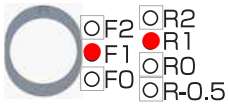

○F2 ○R2
●F1 ●R1
○F0 ○R0
○R-0.5

_____

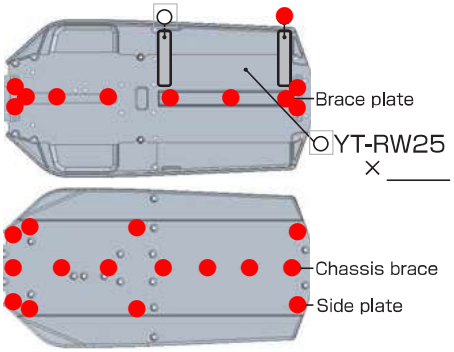

MOTOR ➪ ORION 5.5 Rotor Standard mm

GEAR ➪ Spur 84T / Pinion 20 T : ○2.5 / ○2.35

BATTERY ➪ ORION 5800

ESC ○YOKOMO RPX ○YOKOMO BL-PRO4

●ORION HMX

TIRE

FRONT

TIRE ➪ JC Octagon gold

INSERTS ➪ Standard

WHEELS ➪ JC mono wheel

REAR

TIRE ➪ JC Octagon gold

INSERTS ➪ Standard

WHEELS ➪ JC mono wheel

OTHER

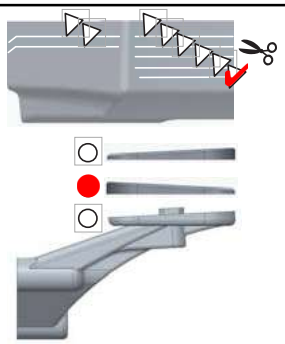

●JC aero S-type

RP titanium screw
Titanium turnbuckle
Aluminum 17mm servo horn
Light weight S1 body

COMMENT

ArnO PetitRC.com