YZ-4 SF SETTING SHEET Ver.01

DRIVER: Joey Fisher

DATE: 12/16/2017

CIRCUIT: Southside RC Raceway

○INDOOR ●OUTDOOR
○DIRT ○ASTROTURF ○CARPET ○GRASS ○WOOD
○WET ●DRY ●DUSTY ○SMOOTH ●BUMPY
○HARD PACKED ●CLAY ●BLUE GROOVE ○ Cold Weather
●LOW TRACTION ●MED TRACTION ○HIGH TRACTION

FRONT

◆CAMBER ○←→○ 2°

◆TOE ○IN ●OUT 1°

◆RIDE HEIGHT 21 mm

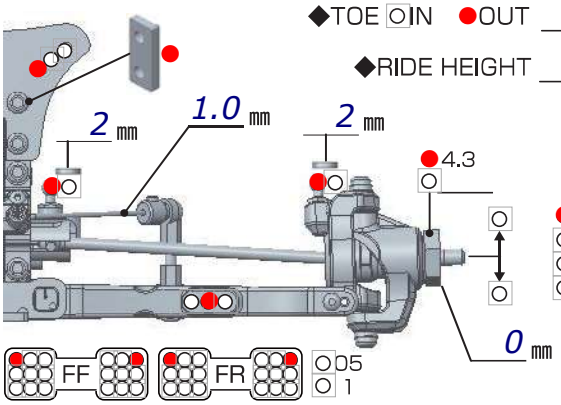

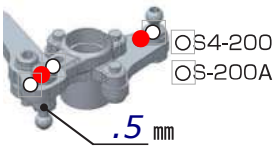

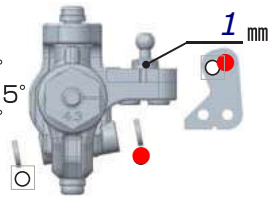

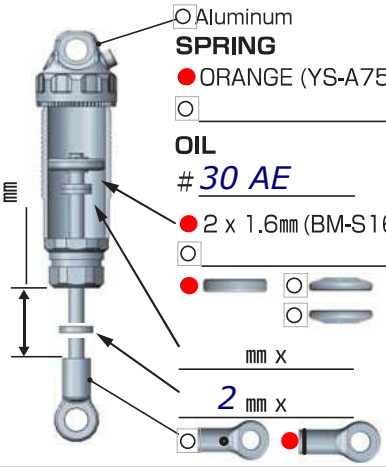

REAR

◆CAMBER ○←→○ 2°

◆RIDE HEIGHT 20 mm

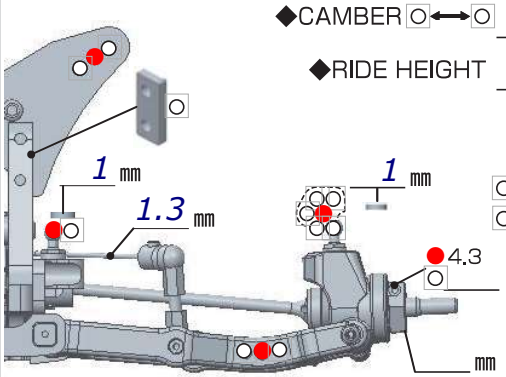

○Z2-415R
○Z2-415R00 (Aluminum)

1 mm
1 mm

○S4-008RL5
○

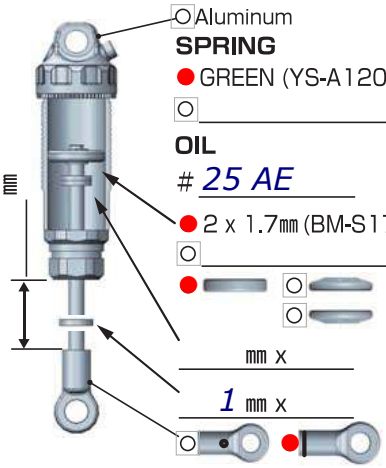

DRIVE

F/# 5k
4 grs
R/# 5k
4 grs

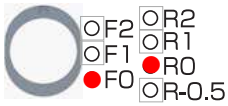

○F2 ○R2
○F1 ●R1
●F0 ○R-0.5

○ #

MOTOR ➪ Trinity Monster Max 13.5 Rotor mm

GEAR ➪ Spur 84 T / Pinion 25 T : 2.6

BATTERY ➪ Trinity Lipo Factory

ESC ○YOKOMO RPX ○YOKOMO BL-PRO4

●Hobbywing XR10 Pro Stock Spec

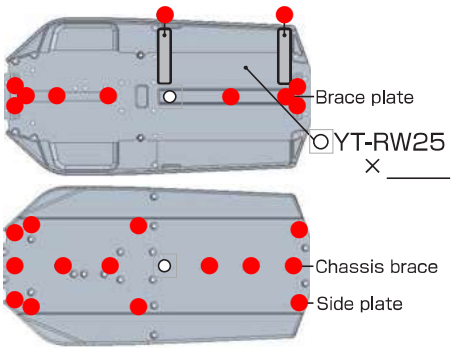

TIRE

FRONT		REAR	
TIRE	➪ AKA Impact Super Soft	TIRE	➪ AKA Impact Super Soft
INSERTS	➪ Open Cell	INSERTS	➪ Open Cell
WHEELS	➪ Yokomo	WHEELS	➪ Yokomo

OTHER

○

●

○

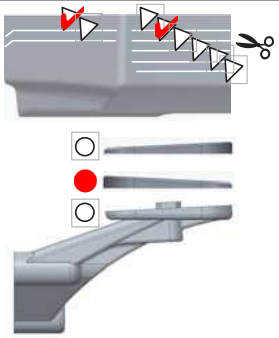

○

●

○

○

Outside Temp: Morning Below 40 - High of 56
Loosen the slipper by a large amount.
R1 Fan on motor.

Car was very good and stable while on power, off power it could be a bit twitchy coming back on power hard. A center gear diff would be best for these conditions.

PetitRC.com ArnO