YZ-4 SF SETTING SHEET Ver.01

DRIVER: Baptiste Roch

DATE: 13.01.2018

CIRCUIT: SIORC

●INDOOR ○OUTDOOR
○DIRT ○ASTROTURF ●CARPET ○GRASS ○WOOD
○WET ○DRY ○DUSTY ●SMOOTH ○BUMPY
○HARD PACKED ○CLAY ○BLUE GROOVE ○ ____
○LOW TRACTION ●MED TRACTION ○HIGH TRACTION

FRONT

◆CAMBER ●←→○ 2 °
◆TOE ○IN ○OUT ____ °
◆RIDE HEIGHT 15 mm

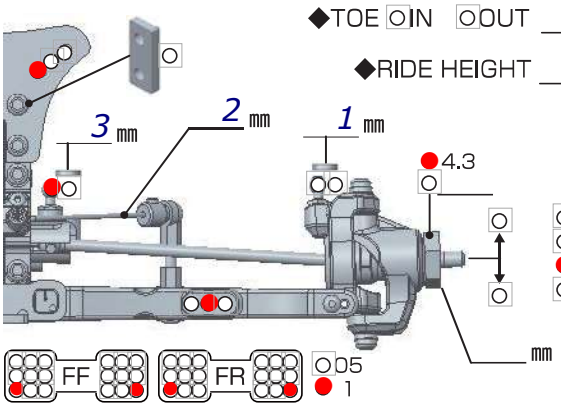

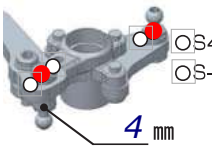

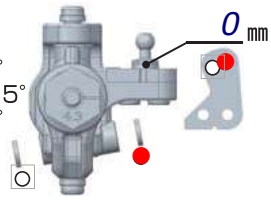

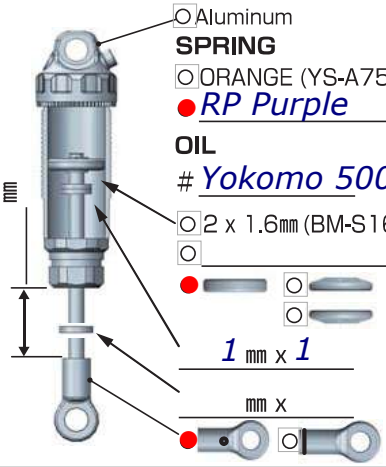

REAR

◆CAMBER ○←→○ 2 °
◆RIDE HEIGHT 15 mm

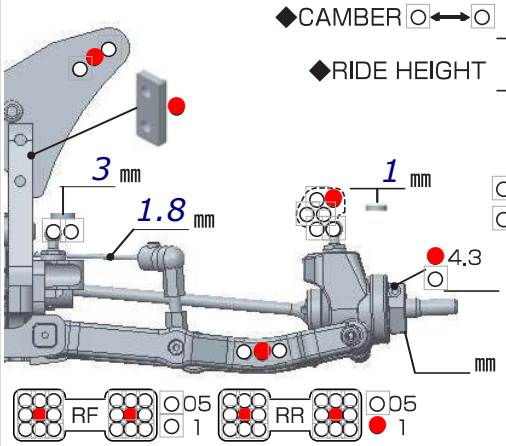

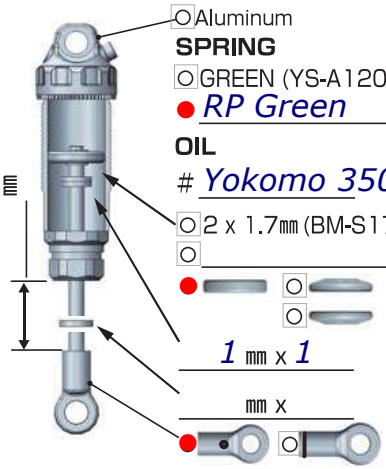

DRIVE

F/# 10k
4 grs
R/# 10k
4 grs

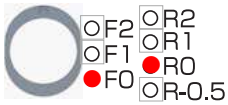

____

MOTOR ➪ Team Orion 5.5 Rotor ____ mm
GEAR ➪ Spur 87T / Pinion 19 T : ● 2.5 / ○ 2.35
BATTERY ➪ Team Orion 5000
ESC ○YOKOMO RPX ○YOKOMO BL-PRO4
○Tream Orion HMX

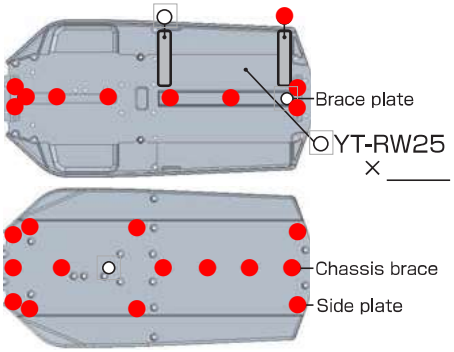

TIRE

FRONT		REAR	
TIRE	➪ Cactus (Handout)	TIRE	➪ Cactus (Handout)
INSERTS	➪	INSERTS	➪
WHEELS	➪	WHEELS	➪

OTHER

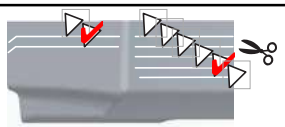

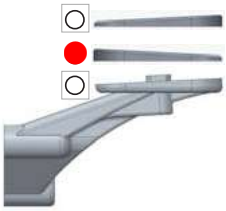

○ ____

COMMENT

Great feeling, easy to drive

ArnO PetitRC.com