YZ-4 SETTING SHEET Ver.01

DRIVER

DATE / /

CIRCUIT

○ INDOOR ○ OUTDOOR
○ WET ○ DRY ○ DUSTY ○ OTHER
○ LOW TRACTION ○ MED TRACTION ○ HIGH TRACTION
○ SMOOTH ○ BUMPY ○ BIUE GROOVE ○ ASTROTURF
○ CARPET ○ WOOD

FRONT

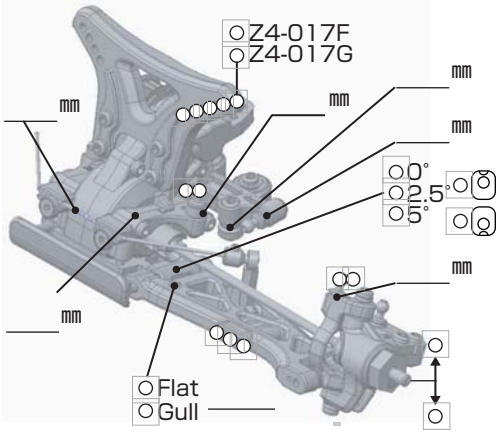

◆CAMBER ○ ←→ ○ ____ °

◆TOE ○ IN ○ OUT ____ °

◆RIDE HEIGHT ____ mm

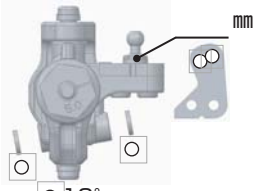

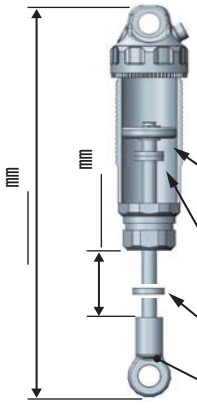

SPRING
○ GREEN (YS-A775)
○ ____

OIL
____
○ #1 ○ #2 ○ #3
○ ____
○ ○ ○ ○
mm x ____
mm x ____
○ SD-008RC

REAR

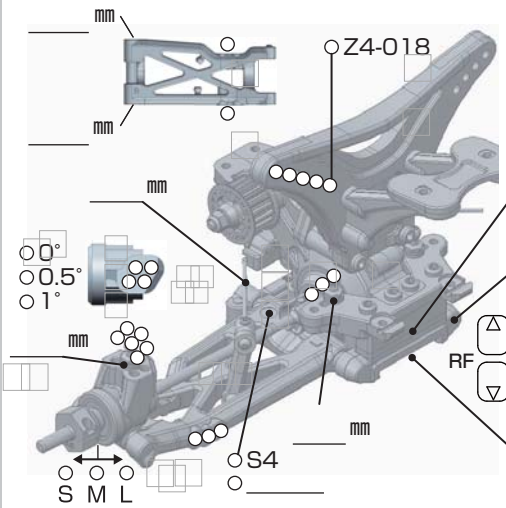

◆CAMBER ○ ←→ ○ ____ °

◆RIDE HEIGHT ____ mm

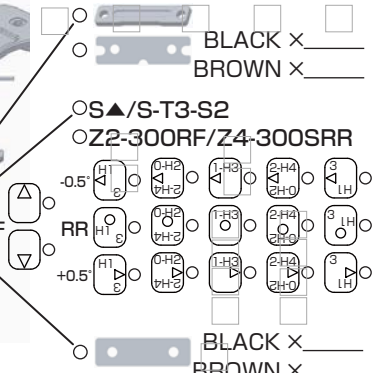

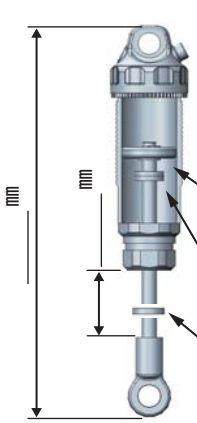

SPRING
○ GREEN (YS-A1200)
○ ____

OIL
____
○ #1 ○ #2 ○ #3
○ ____
○ ○ ○ ○
mm x ____
mm x ____

DRIVE

F/# ____
R/#

MOTOR ⇨ ____ ○ Bonded ○ Sintered mm

GEAR ⇨ Spur T ／ Pinion T : 2.6

BATTERY ⇨ ____

ESC ○ Racing Performer X Series

○ ____

Battery placement

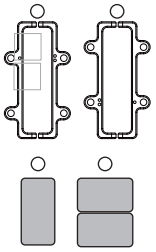

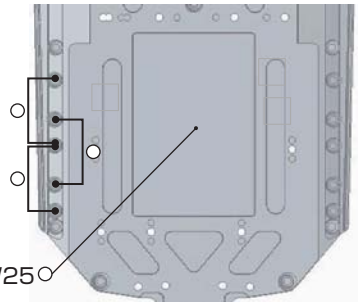

TIRE

FRONT		REAR	
TIRE ⇨	____	TIRE ⇨	____
INSERTS ⇨	____	INSERTS ⇨	____
WHEELS ⇨	____	WHEELS ⇨	____

OTHER

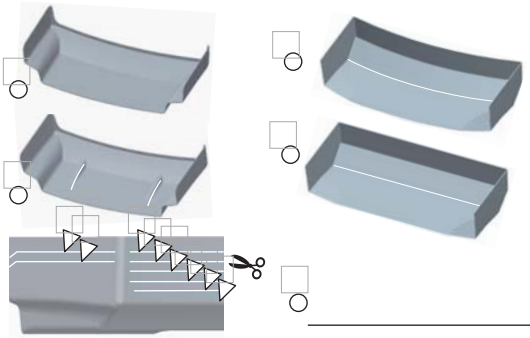

○ ____

COMMENT

Editable by Arn0 at PetitRC.com