YZ-4 SETTING SHEET

P040 Version 1.1

DRIVER _____ DATE / /

CIRCUIT

○ INDOOR ○ OUTDOOR
○ WET ○ DRY ○ DUSTY ○ OTHER
○ LOW TRACTION ○ MED TRACTION ○ HIGH TRACTION
○ SMOOTH ○ BUMPY ○ BIUE GROOVE ○ ASTROTURF
○ CARPET ○ WOOD

FRONT

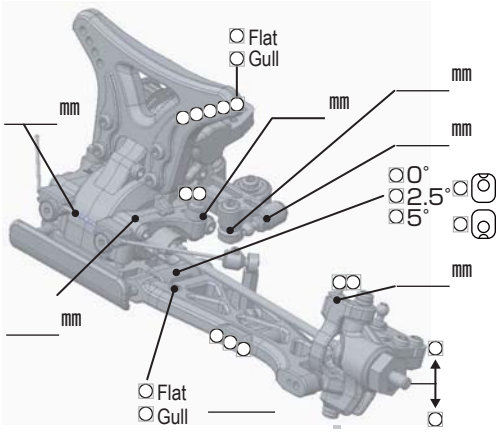

◆CAMBER ○ ←→ ○ _____ °

◆TOE ○ IN ○ OUT _____ °

◆RIDE HEIGHT _____ mm

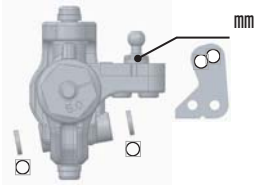

○ 10°
◉ 12.5°
○ 15°

○ Alu Centerlink
○ Alu Bell crank

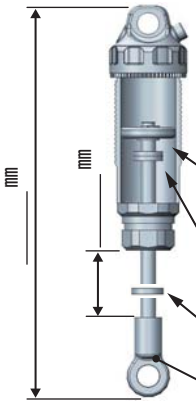

SPRING
○ GREEN (YS-A775)
○ _____

OIL
_____
○ #1 ○ #2 ○ #3
○ _____
○ ○
○ ○

mm x _____
mm x _____
○ SD-008RC

REAR

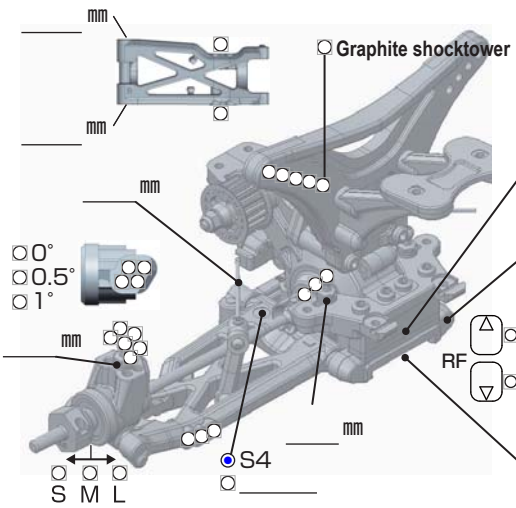

◆CAMBER ○ ←→ ○ _____ °

◆RIDE HEIGHT _____ mm

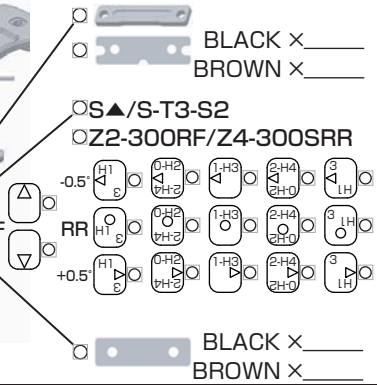

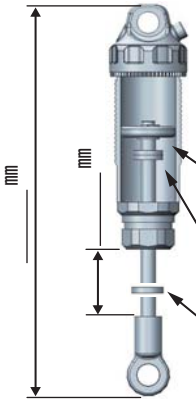

SPRING
○ GREEN (YS-A1200)
○ _____

OIL
_____
○ #1 ○ #2 ○ #3
○ _____
○ ○
○ ○

mm x _____
mm x _____

DRIVE

F/# _____
R/# _____

MOTOR ➪ _____ ○ Bonded ○ Sintered _____ mm
GEAR ➪ Spur T ／ Pinion T : 2.6
BATTERY ➪ _____
ESC ○ Racing Performer X Series
○ _____

Battery placement

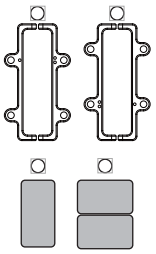

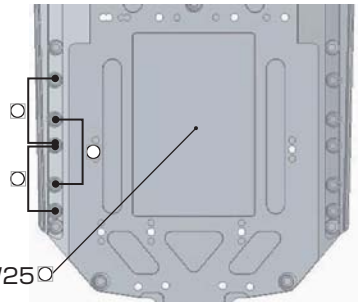

TIRE

FRONT		REAR	
TIRE ➪	_____	TIRE ➪	_____
INSERTS ➪	_____	INSERTS ➪	_____
WHEELS ➪	_____	WHEELS ➪	_____

OTHER

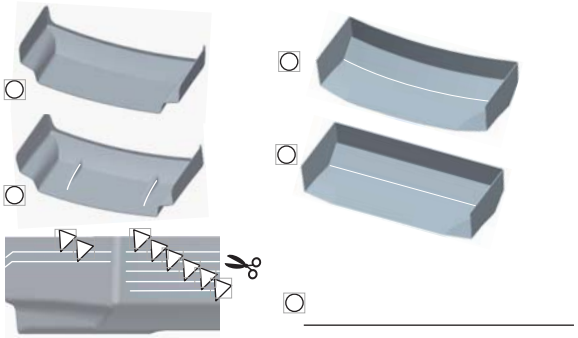

○ _____

COMMENT