# YZ-4 SETTING SHEET Ver.02

DRIVER

DATE

CIRCUIT

○INDOOR ○OUTDOOR
○WET ○DRY ○DUSTY ○SMOOTH ○BUMPY
○LOW TRACTION ○MED TRACTION ○HIGH TRACTION
○CLAY ○GRASS ○BLUE GROOVE ○ASTROTURF ○DIRT
○CARPET ○WOOD ○OTHER:_____

## FRONT

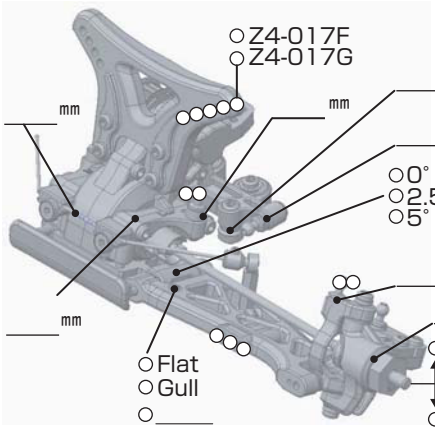


♦CAMBER ○←→○ _____°

♦TOE ○IN ○OUT _____°

♦RIDE HEIGHT _____mm

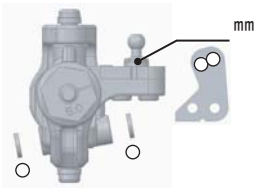


○10°
○12.5°
○15°
○Z4-201CL
○Z2-201BA

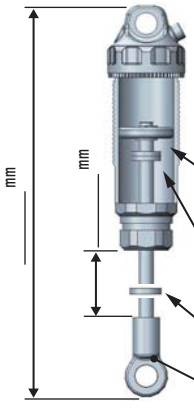


SPRING
○GREEN (YS-A775)
○_____
PRELOAD_____
OIL_____
○#1 ○#2 ○#3
○_____
mm x _____
mm x _____
○SD-008RC

## REAR

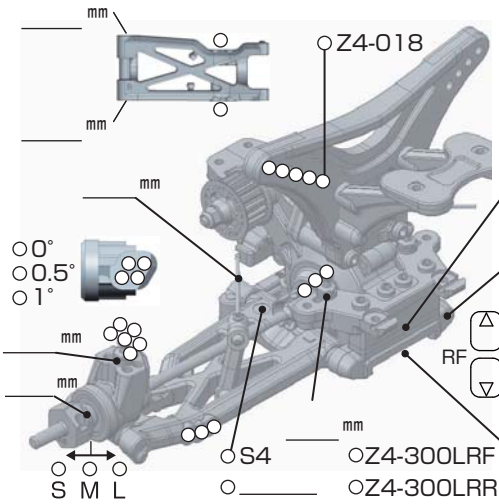


♦CAMBER ○←→○ _____°

♦RIDE HEIGHT _____mm

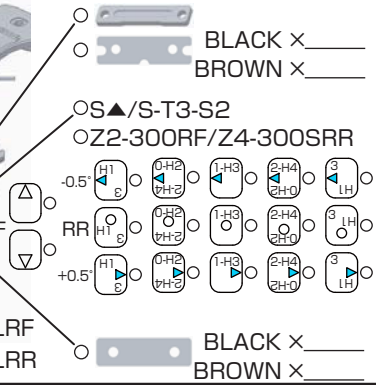


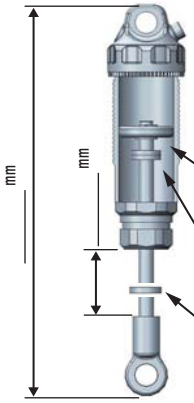


SPRING
○GREEN (YS-A1200)
○_____
PRELOAD_____
OIL_____
○#1 ○#2 ○#3
○_____
mm x _____
mm x _____

## DRIVE

F/#_____
R/#_____

F_____
R_____

MOTOR ⇨ _____ ○Bonded ○Sintered mm

GEAR ⇨ Spur T ／ Pinion T : 2.6

BATTERY ⇨ _____

ESC ⇨ Racing Performer X Series

⇨ _____

Battery placement

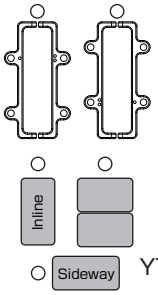


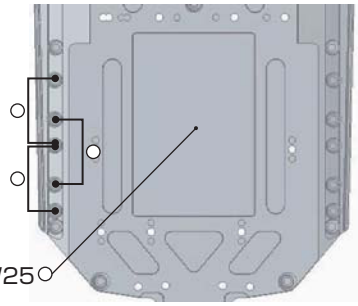

YT-RW25

## TIRE

| FRONT | | REAR | |
|---|---|---|---|
| TIRE ⇨ | _____ | TIRE ⇨ | _____ |
| INSERTS ⇨ | _____ | INSERTS ⇨ | _____ |
| WHEELS ⇨ | _____ | WHEELS ⇨ | _____ |

## OTHER

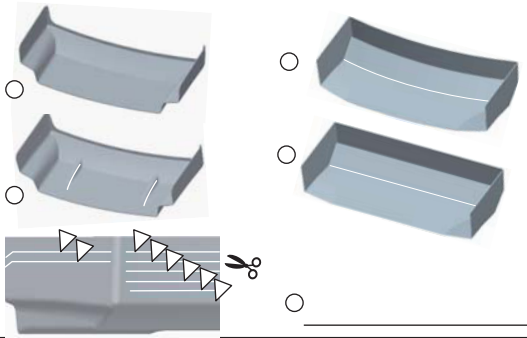

○_____

COMMENT

ArnO