YZ-4 SETTING SHEET Ver.02

DRIVER

DATE

CIRCUIT

○INDOOR ○OUTDOOR
○WET ○DRY ○DUSTY ○SMOOTH ○BUMPY
○LOW TRACTION ○MED TRACTION ○HIGH TRACTION
○CLAY ○GRASS ○BLUE GROOVE ○ASTROTURF ○DIRT
○CARPET ○WOOD ○OTHER:_____

FRONT

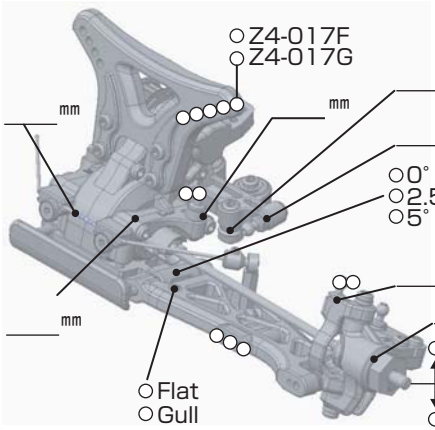

♦CAMBER ○←→○ _____ °

♦TOE ○IN ○OUT _____ °

♦RIDE HEIGHT _____ mm

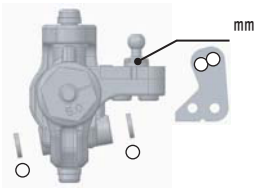

○10°
○12.5°
○15°
○Z4-201CL
○Z2-201BA

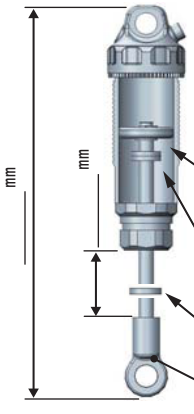

SPRING
○GREEN (YS-A775)
○_____
PRELOAD_____
OIL_____
○#1 ○#2 ○#3
○_____
mm x _____
mm x _____
○SD-008RC

REAR

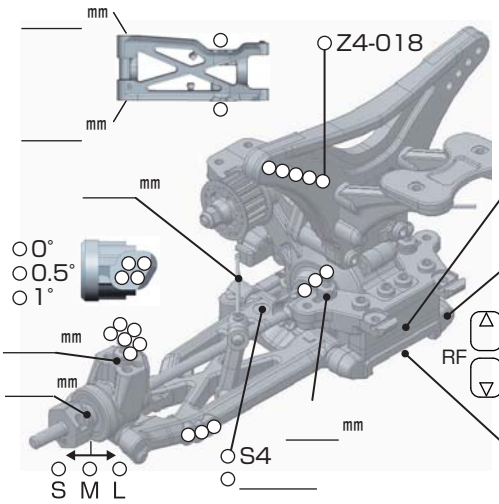

♦CAMBER ○←→○ _____ °

♦RIDE HEIGHT _____ mm

BLACK ×_____
BROWN ×_____

○S▲/S-T3-S2
○Z2-300RF/Z4-300SRR

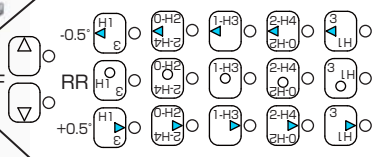

BLACK ×_____
BROWN ×_____

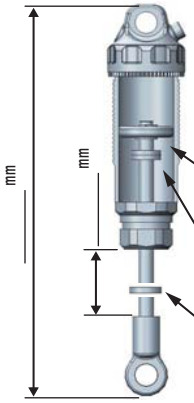

SPRING
○GREEN (YS-A1200)
○_____
PRELOAD_____
OIL_____
○#1 ○#2 ○#3
○_____
mm x _____
mm x _____

DRIVE

F/#_____
R/#_____

F _____
R _____

MOTOR ⇨ _____ ○Bonded ○Sintered mm

GEAR ⇨ Spur T ／ Pinion T : 2.6

BATTERY ⇨ _____

ESC ⇨ Racing Performer X Series

⇨ _____

Battery placement

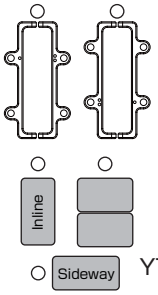

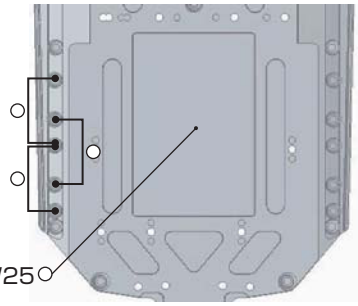

YT-RW25

TIRE

FRONT		REAR	
TIRE ⇨	_____	TIRE ⇨	_____
INSERTS ⇨	_____	INSERTS ⇨	_____
WHEELS ⇨	_____	WHEELS ⇨	_____

OTHER

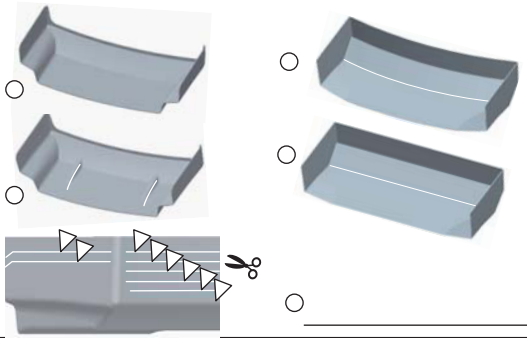

○_____

COMMENT

ArnO