YZ-4 SETTING SHEET Ver.02

DRIVER: LEE RALPH

DATE: 26/02/16

CIRCUIT: Halesowen Model Car Club

- ● INDOOR ○ OUTDOOR
- ○ WET ○ DRY ○ DUSTY ● SMOOTH ○ BUMPY
- ○ LOW TRACTION ○ MED TRACTION ● HIGH TRACTION
- ○ CLAY ○ GRASS ○ BLUE GROOVE ○ ASTROTURF ○ DIRT
- ● CARPET ○ WOOD ○ OTHER: _____

FRONT

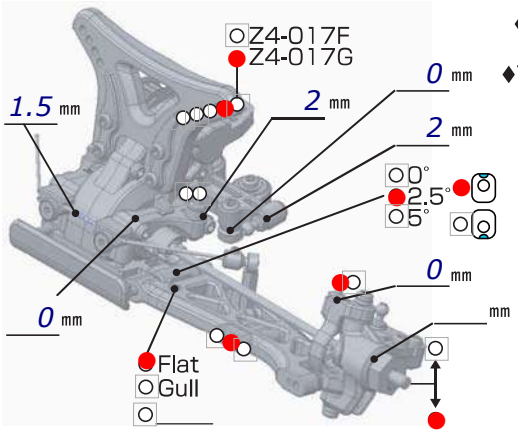

♦CAMBER ○ ⟷ ○ 1.5 °

♦TOE ○ IN ● OUT 1 °

♦RIDE HEIGHT 16 mm

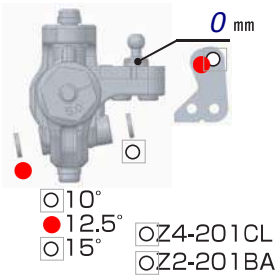

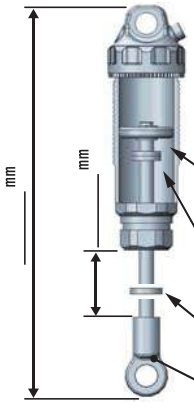

SPRING
○ GREEN (YS-A775)
● Yatabe black
PRELOAD _____
OIL 500
○ #1 ○ #2 ○ #3
● 1.6 Avid
● ▬ ○ ▬
○ ▬
2 mm x _____
mm x _____
○ SD-008RC

REAR

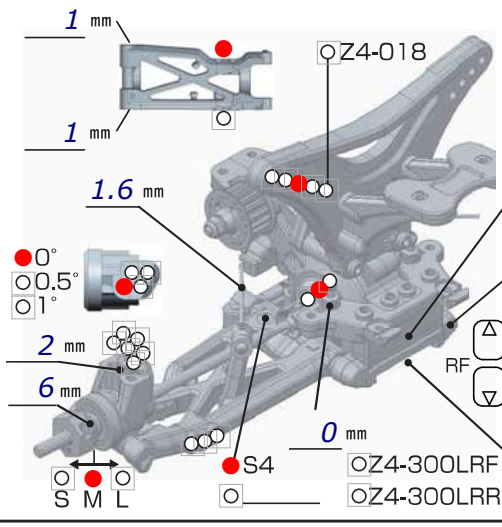

♦CAMBER ○ ⟷ ○ 2 °

♦RIDE HEIGHT 16 mm

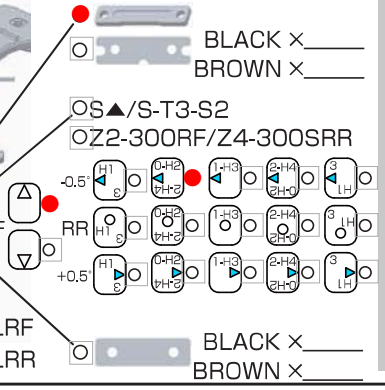

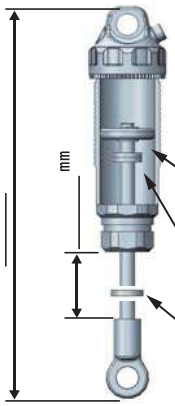

SPRING
○ GREEN (YS-A1200)
● Yatabe Green
PRELOAD _____
OIL 350
○ #1 ○ #2 ○ #3
● 1.6 Avid
● ▬ ○ ▬
○ ▬
2 mm x _____
mm x _____

DRIVE

F/# 20k
R/# 10k

F _____
R _____

MOTOR ⇨ Fleta 6.5 ○ Bonded ○ Sintered mm

GEAR ⇨ Spur Kit T / Pinion 20 T : 2.6

BATTERY ⇨ Shorty

ESC ⇨ Racing Performer X Series

⇨ _____

Battery placement

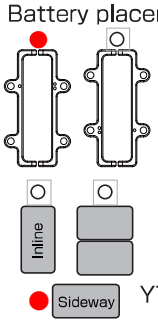

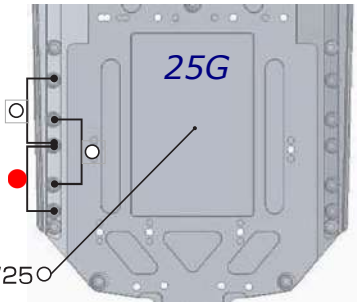

TIRE

FRONT		REAR	
TIRE	⇨ Schumacher Yellow Stagger	TIRE	⇨ Schumacher White Venom
INSERTS	⇨ Soft	INSERTS	⇨ AKA Medium
WHEELS	⇨ Yokomo	WHEELS	⇨ Yokomo

OTHER

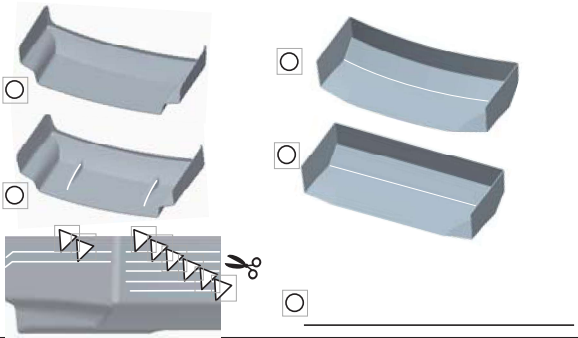

COMMENT

Editable by Arn0 at Petitrc.com

Proline Phantom bodyshell and wing.
28g Bmax weight in front of FR hanger.
LMR top deck, two screws at each end only.
Good rotation, good traction.
Some push in the sweeper, will tweak front links and more front droop.

Arn0