YZ-4 SETTING SHEET Ver.02

DRIVER	Lee Martin	DATE	2016/07/30

CIRCUIT: EURO 2016

○INDOOR ●OUTDOOR
●DIRT ○ASTROTURF ○CARPET ○GLASS ○WOOD
○WET ●DRY ○DUSTY ○SMOOTH ●BUMPY
○HARD PACKED ○CLAY ○BIUE GROOVE ○_____
●LOW TRACTION ○MED TRACTION ○HIGH TRACTION

FRONT

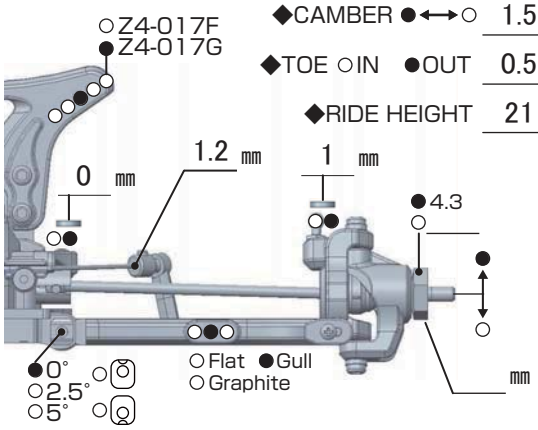

◆CAMBER ●←→○ 1.5 °
◆TOE ○IN ●OUT 0.5 °
◆RIDE HEIGHT 21 mm

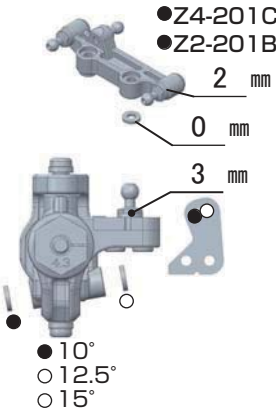

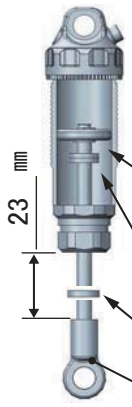

SPRING
○GREEN (YS-A775)
● Orange (YS-A750)

OIL
32.5 (AE)
○#1 ○#2 ○#3
● 1.5mm×2 (BM-S152)
mm x
mm x
●SD-008RC

REAR

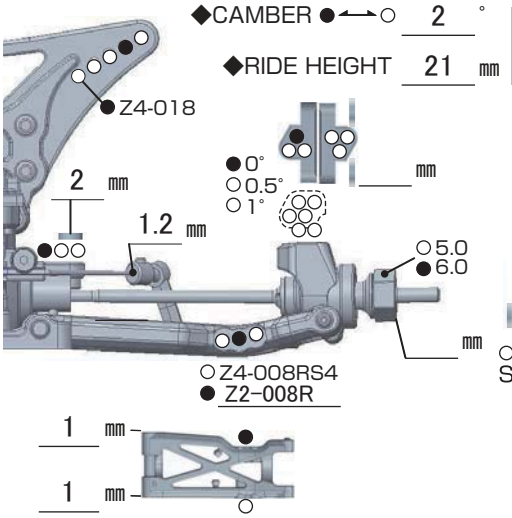

◆CAMBER ●←→○ 2 °
◆RIDE HEIGHT 21 mm

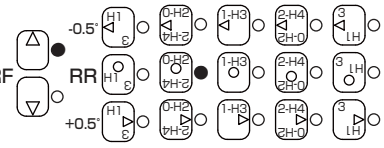

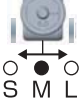

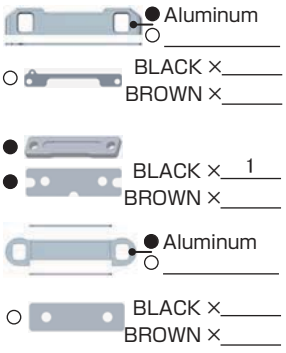

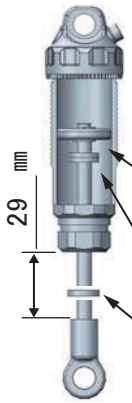

SPRING
○GREEN (YS-A1200)
● Pink (KY)

OIL
25 (AE)
○#1 ○#2 ○#3
● 1.7mm×2 (BM-S172)
mm x
mm x

DRIVE

F/# 7,000
R/# 5,000

MOTOR ➪ RC concept 5.5T Rotor mm
GEAR ➪ Spur 87 T / Pinion 20 T : 2.6
BATTERY ➪ RC concept
ESC ○ YOKOMO RPX ○YOKOMO BL-PRO
◉ RC concept

Battery placement

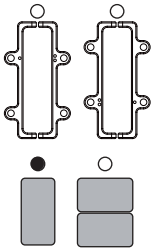

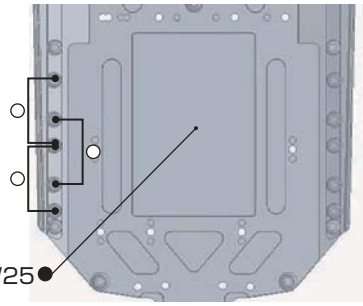

TIRE

FRONT		REAR	
TIRE	➪ PL Hole shot M3	TIRE	➪ PL Hole shot M3
INSERTS	➪ Std	INSERTS	➪ Std
WHEELS	➪ YOKOMO B4-821W	WHEELS	➪ YOKOMO B4-827W

OTHER

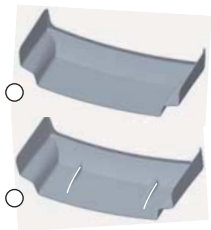

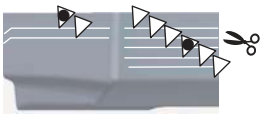

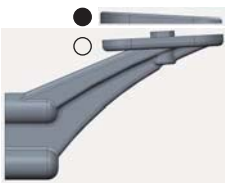

● LMR

COMMENT

Z4-TBS
Z4-TSS
Z2-S2SD
Z2-S2LD
Z2-415RS New aluminum rear hub carrier
Z4-003S High flex upper deck