YZ-4 SETTING SHEET Ver.01

DRIVER

DATE

CIRCUIT

○INDOOR ○OUTDOOR
○WET ○DRY ○DUSTY ○SMOOTH ○BUMPY
○LOW TRACTION ○MED TRACTION ○HIGH TRACTION
○CLAY ○GRASS ○BLUE GROOVE ○ASTROTURF ○DIRT
○CARPET ○WOOD ○OTHER:_____

FRONT

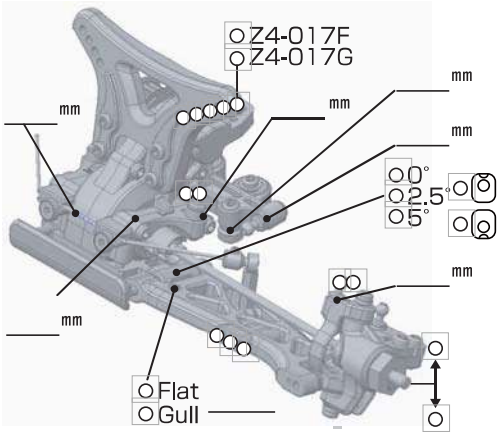

♦CAMBER ○←→○ _____°

♦TOE ○IN ○OUT _____°

♦RIDE HEIGHT _____mm

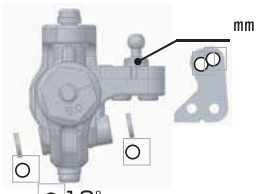

○10°
○12.5°
○15°
○Z4-201CL
○Z2-201BA

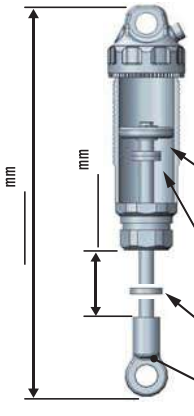

SPRING
○GREEN (YS-A775)
○_____

PRELOAD_____

OIL_____

○#1 ○#2 ○#3
○_____

mm x _____

mm x _____

○SD-008RC

REAR

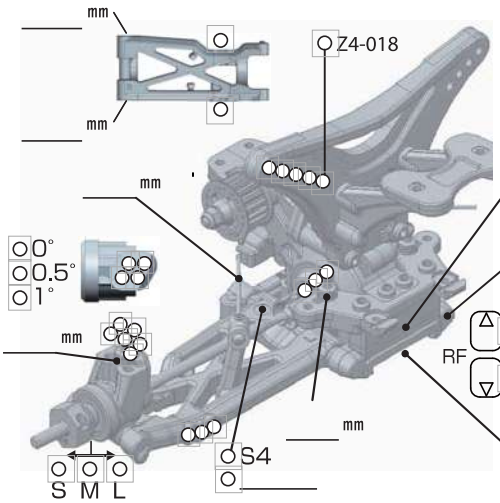

♦CAMBER ○←→○ _____°

♦RIDE HEIGHT _____mm

○ BLACK ×_____
○ BROWN ×_____

○S▲/S-T3-S2
○Z2-300RF/Z4-300SRR

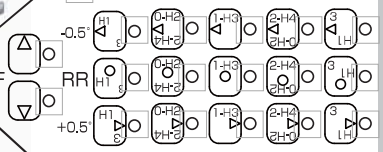

○ BLACK ×_____
○ BROWN ×_____

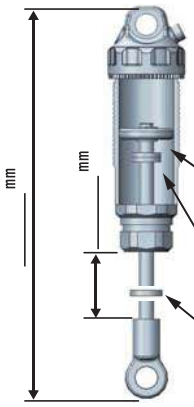

SPRING
○GREEN (YS-A1200)
○_____

PRELOAD_____

OIL_____

○#1 ○#2 ○#3
○_____

mm x _____

mm x _____

DRIVE

F/#_____
R/#_____

MOTOR ⇨ _____ ○Bonded ○Sintered _____mm

GEAR ⇨ Spur T ／ Pinion T : 2.6

BATTERY ⇨ _____

ESC ⇨ Racing Performer X Series

⇨ _____

Battery placement

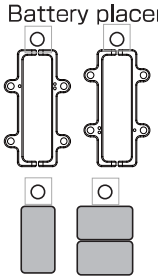

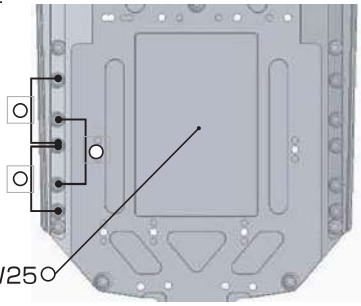

TIRE

FRONT		REAR	
TIRE ⇨		TIRE ⇨	
INSERTS ⇨		INSERTS ⇨	
WHEELS ⇨		WHEELS ⇨	

OTHER

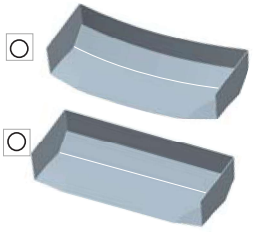

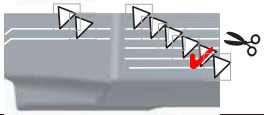

○_____

COMMENT

Editable by Arn0 at PetitRC.com

Arn0