YZ-4 SETTING SHEET Ver.01

DRIVER *Carson Wernimont* | DATE

CIRCUIT *SRS Raceway Cactus Classic*

● INDOOR ○ OUTDOOR
● WET ○ DRY ○ DUSTY ● SMOOTH ○ BUMPY
○ LOW TRACTION ○ MED TRACTION ● HIGH TRACTION
● CLAY ○ GRASS ○ BLUE GROOVE ○ ASTROTURF ○ DIRT
○ CARPET ○ WOOD ○ OTHER:

FRONT

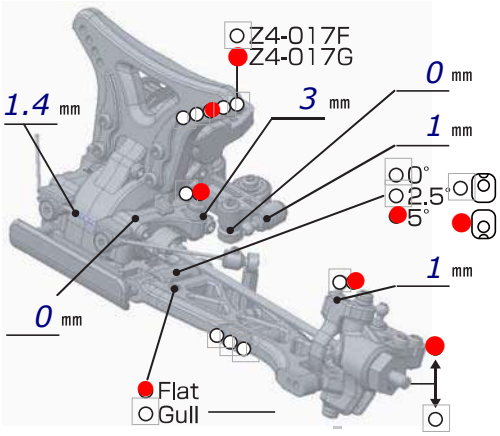

♦CAMBER ● ↔ ○ -1 °

♦TOE ○ IN ● OUT +1 °

♦RIDE HEIGHT 17 mm

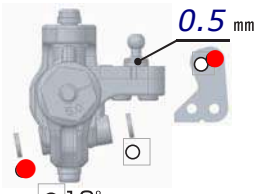

○ 10°
○ 12.5°
● 15°
○ Z4-201CL
○ Z2-201BA

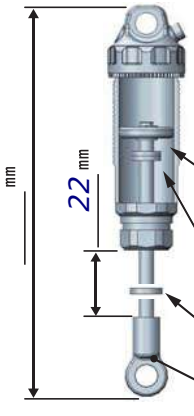

SPRING
○ GREEN (YS-A775)
○ *XGEAR Orange*

PRELOAD

OIL *MR33 500*

○ #1 ○ #2 ○ #3
○ *1.6x2*

● ○ ○

0 mm x

mm x

○ SD-008RC

REAR

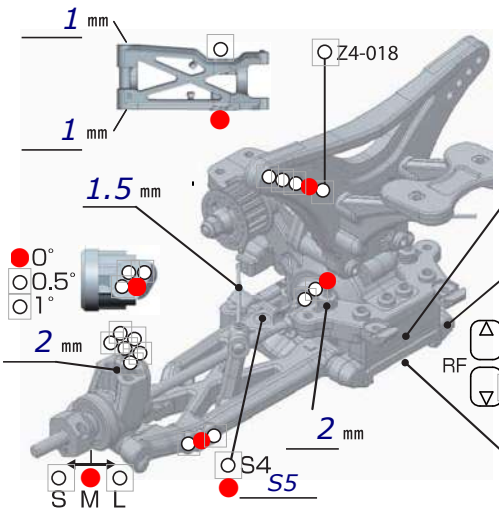

♦CAMBER ● ↔ ○ -1 °

♦RIDE HEIGHT 19 mm

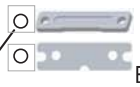

BLACK × *2*
BROWN × *1*

○ S▲/S-T3-S2
○ Z2-300RF/Z4-300SRR

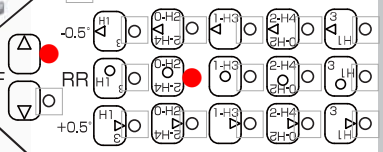

BLACK × *1*
BROWN ×

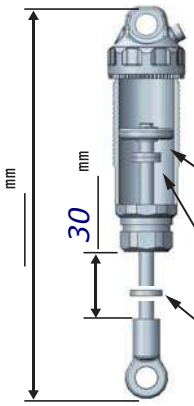

SPRING
○ GREEN (YS-A1200)
○ *Yokomo Orange*

PRELOAD

OIL *MR33 400*

○ #1 ○ #2 ○ #3
○ *1.7x2*

● ○ ○

0 mm x

mm x

DRIVE

F/# *10,000*
R/# *7,000*

○ Bonded
○ Sintered mm

MOTOR ⇨ *Yokomo 6.0*

GEAR ⇨ Spur T / Pinion *21* T : 2.6

BATTERY ⇨ *Yokomo 4800 Shorty*

ESC ⇨ Racing Performer X Series

⇨

Battery placement

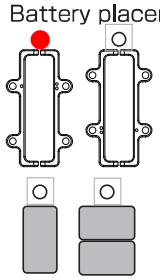

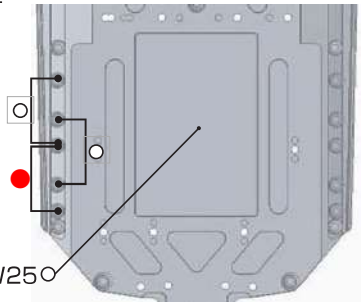

TIRE

FRONT		REAR	
TIRE	⇨ *Proline Prime MC*	TIRE	⇨ *Proline Prime MC*
INSERTS	⇨ *Stock*	INSERTS	⇨ *Proline Hard*
WHEELS	⇨ *Yokomo*	WHEELS	⇨ *Yokomo*

OTHER

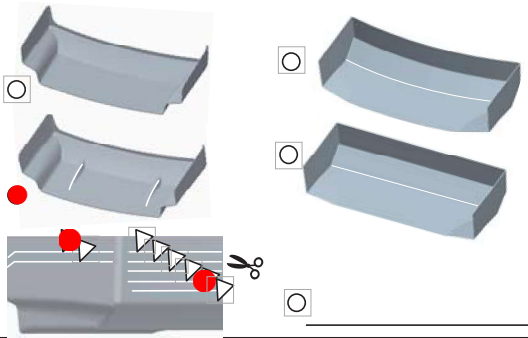

○

COMMENT

Editable by Arn0 at PetitRC.com

ESC Mounted in the Back by the Battery
Gull Wing front tower with +1mm flat arms
S5 rear arms
-5 degree front kick up insert
15 degree castor blocks
Light Weight bodyshell
Carbon Fiber shock towers
Belts set loose

Arn0