B-MAX4 III

SETTING SHEET Ver.01

DRIVER _____ DATE / /

CIRCUIT

○ INDOOR ○ OUTDOOR
○ WET ○ DRY ○ DUSTY ○ OTHER
○ LOW TRACTION ○ MED TRACTION ○ HIGH TRACTION
○ SMOOTH ○ BUMPY ○ BIUE GROOVE ○ ASTROTURF
○ CARPET ○ WOOD

FRONT

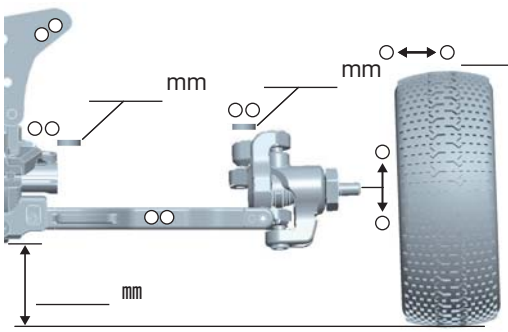

◆TOE-IN (+) / OUT(−) _____ °

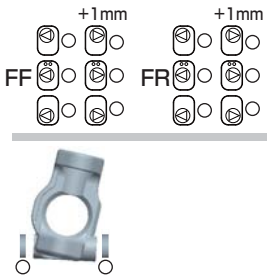

○1.0 ○1.1
○1.2 ○1.3
○1.4

○ BALL DIFF
○ GEAR DIFF
_____

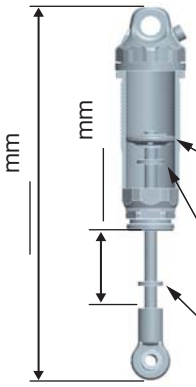

○ X SHOCK
SPRING
○ BLACK
○ _____
OIL
_____
○ #1 ○ #2 ○ #3 ○ #4
○ _____
○ ○
○ ○
mm x _____
mm x _____

REAR

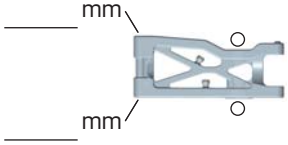

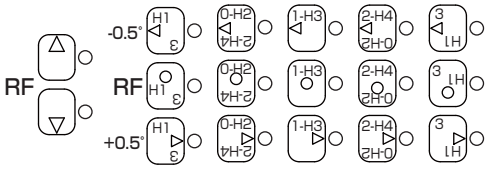

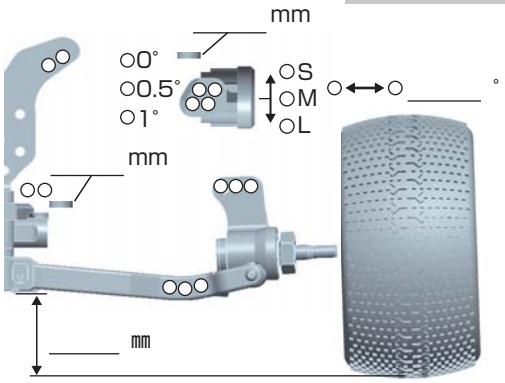

○1.0 ○1.1
○1.2 ○1.3
○1.4 ○1.5
○1.6

○ BALL DIFF
○ GEAR DIFF
_____

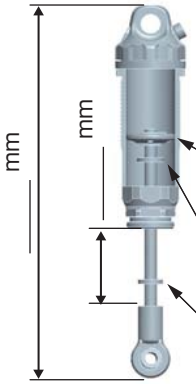

○ X SHOCK
SPRING
○ BLACK
○ _____
OIL
_____
○ #1 ○ #2 ○ #3 #4
○ _____
○ ○
○ ○
mm x _____
mm x _____

DRIVE

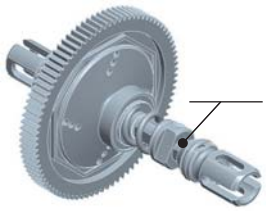

MOTOR ➪ _____ ○Bonded ○Sintered mm
GEAR ➪ Spur T ／ Pinion T : 2.35
BATTERY ➪ _____
ESC ○ NOSRAM / / /
○BL-R3 ○ _____

Battery placement

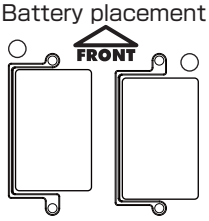

TIRE

FRONT

TIRE ➪ _____
INSERTS ➪ _____
WHEELS ➪ _____

REAR

TIRE ➪ _____
INSERTS ➪ _____
WHEELS ➪ _____

OTHER

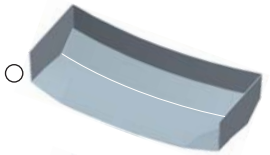

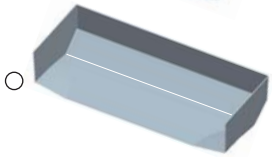

○ FULL RIP

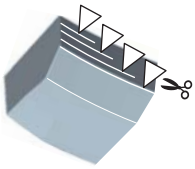

○ _____

COMMENT