Created by Arn0

B-MAX4

EDITABLE SETTING SHEET Ver.01

DRIVER

DATE / /

CIRCUIT

○ INDOOR ○ OUTDOOR
○ WET ○ DRY ○ DUSTY ○ OTHER
○ LOW TRACTION ○ MED TRACTION ○ HIGH TRACTION
○ SMOOTH ○ BUMPY ○ SANDY ○ GRASS ○ BIUE GROOVE

FRONT

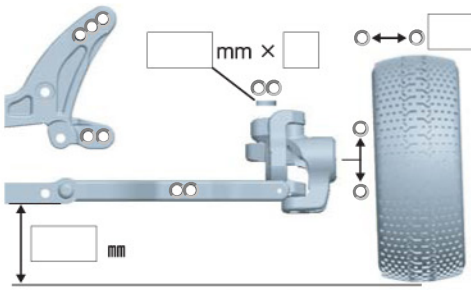

◆TOE-IN (+) / OUT(−) °

○ DIFF
○ ONE-WAY

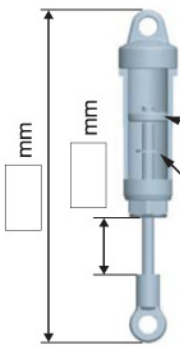

SPRING
○ BLACK
○ _____

OIL
_____
○ #1 ○ #2 ○ #3 ○ #4

REAR

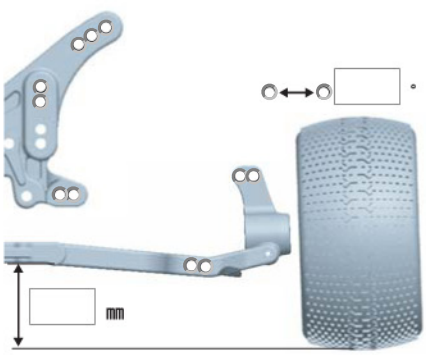

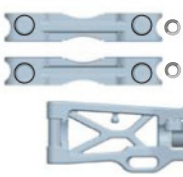

○ S
○ M
○ L

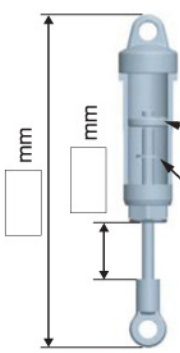

SPRING
○ BLACK
○ _____

OIL
_____
○ #1 ○ #2 ○ #3 ○ #4

DRIVE

○ LOCK

SPER
○ 87T
○ _____ T

PINION
○ 18T: 2.35
○ _____ T

MOTOR ➪ _____ ○ Bonded ○ Sintered mm
BRUSHES ➪ _____
BATTERY ➪ _____
ESC ○ MATRIX ISTC ○ VFS-1 CompⅢ
○ _____

TIRE

FRONT
TIRE ➪ _____
INSERTS ➪ _____
WHEELS ➪ _____

REAR
TIRE ➪ _____
INSERTS ➪ _____
WHEELS ➪ _____

OTHER

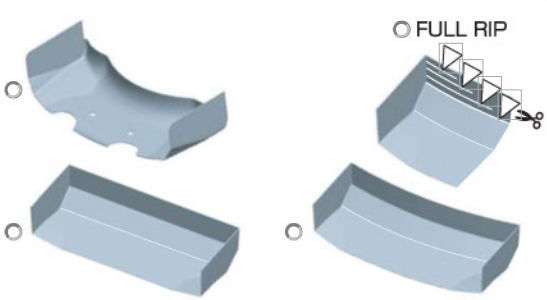

COMMENT