B-MAX4

SETTING SHEET Ver.01

DRIVER	*Arnaud Ledun*
DATE	*29-30.08.2009*
CIRCUIT	*2009 French Cup, LMRC, Limoges*

○ INDOOR ◉ OUTDOOR
○ WET ◉ DRY ◉ DUSTY ○ OTHER
○ LOW TRACTION ○ MED TRACTION ○ HIGH TRACTION
○ SMOOTH ◉ BUMPY ○ SANDY ○ GRASS ○ BIUE GROOVE

FRONT

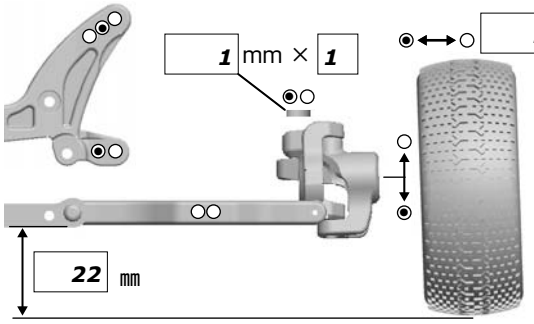

◆TOE-IN (+) / OUT(−) -1 °

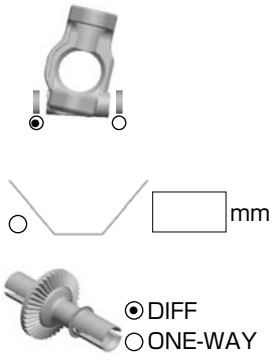

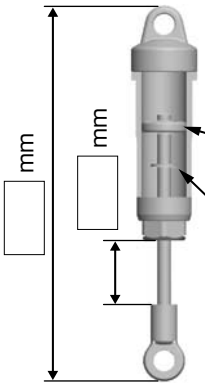

SPRING
◉ BLACK
○ _____

OIL
450 Yokomo
○ #1 ○ #2 ○ #3 ○ #4
Black piston

mm x

REAR

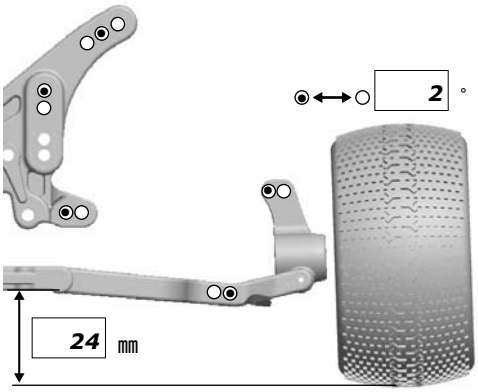

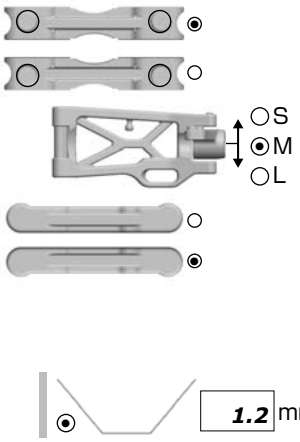

Lift rear A-arms for 1mm, add shim under support / Surelever les triangles d'1mm rondelles sous les supports.

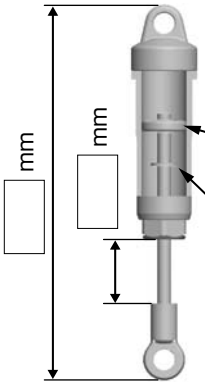

SPRING
○ BLACK
◉ ***Green***

OIL
350 Yokomo
○ #1 ○ #2 ○ #3 ○ #4
White piston

mm x

DRIVE

○ LOCK

SPER	PINION
○ 87T	○ 18T: 2.35
○ ____ T	○ ____ T

MOTOR	➪ ***TPR***	○ Bonded ○ Sintered mm
BRUSHES	➪	
BATTERY	➪	
ESC	○ MATRIX ISTC ○ VFS-1 CompIII	
	◉ ***SP***	

TIRE

FRONT		REAR	
TIRE	➪ ***Team Losi IFMAR Stud 2.2" Red***	TIRE	➪ ***Team Losi IFMAR Stud 2.2" Red***
INSERTS	➪	INSERTS	➪
WHEELS	➪	WHEELS	➪

Editable by Arn0(@)PetitRC.com

OTHER

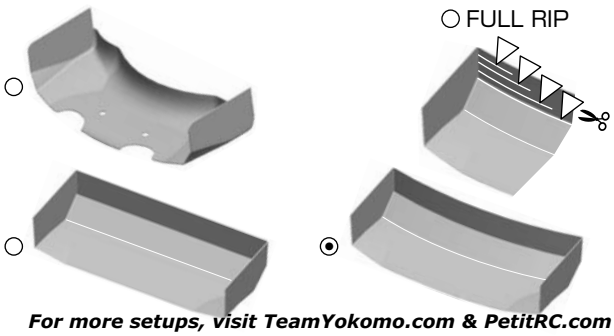

For more setups, visit TeamYokomo.com & PetitRC.com

COMMENT

Final result: 2nd

Very rutted track, large jumps, long straight

La piste très bosselé, avec des gros trous, des grands sauts et une ligne longue droite