B-MAX4 III

Arn0

SETTING SHEET

Ver.04

DRIVER KAITO

DATE

CIRCUIT HUDY ARENA

- ● INDOOR ○ OUTDOOR
- ○ WET ● DRY ○ DUSTY ○ SMOOTH ○ BUMPY ○ OTHER
- ○ LOW TRACTION ○ MED TRACTION ● HIGH TRACTION
- ○ CLAY ○ GRASS ○ BLUE GROOVE ○ ASTROTURF ○ DIRT ● CARPET ○ WOOD

FRONT

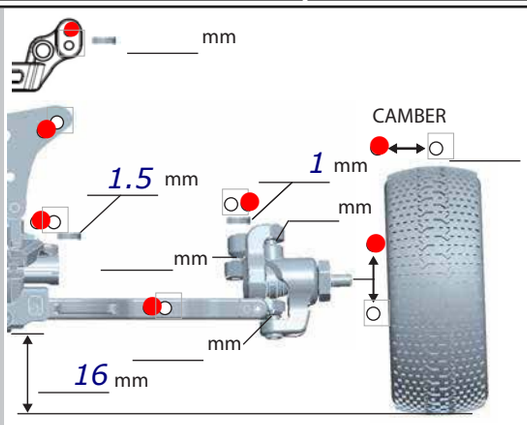

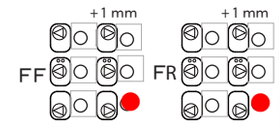

○ B4-413A8
● B4-413A15

○ 1.0 ○ 1.1
○ 1.2 ○ 1.3
○ 1.4 ○ 1.5
○ 1.6 ● 1.8

○ BALL DIFF
● GEAR DIFF
10000

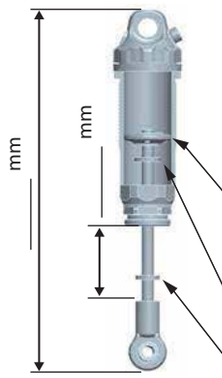

○ X SHOCK
SPRING
○ BLACK
● PURPLE

PRELOAD

OIL
550

○ #1 ○ #2 ○ #3 ○ #4
● 1.6 X 2

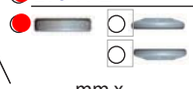

mm x

mm x

REAR

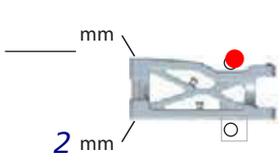

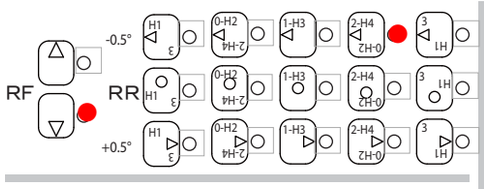

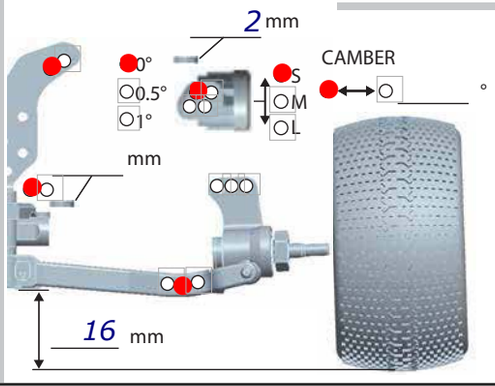

○ BM-008R ○ Z2-415R00
○ B4-BWR ●

○ 1.0 ○ 1.1
○ 1.2 ○ 1.3
○ 1.4 ● 1.5
○ 1.6 ○

○ BALL DIFF
● GEAR DIFF
10000

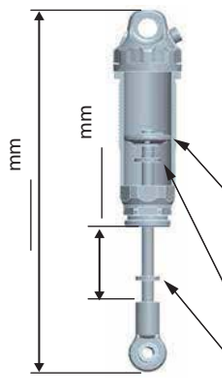

○ X SHOCK
SPRING
○ BLACK
● ORANGE

PRELOAD

OIL
450

○ #1 ○ #2 ○ #3 ○ #4
● 1.7 X 2

mm x

mm x

DRIVE

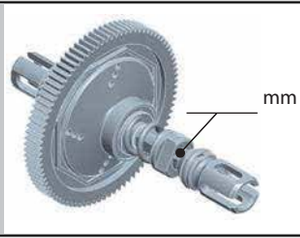

MOTOR ⇨ YOKOMO RP 5.0T M2 ○ Bonded ○ Sintered mm

GEAR ⇨ Spur 84 T / Pinion 18 T : 2.35

BATTERY ⇨ YOKOMO RP 4800

ESC ● Racing Performer X Series / / /

○ BL-R3 ○

Battery placement ● Shorty

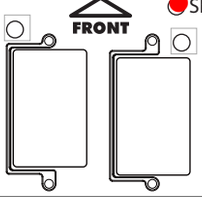

TIRE

FRONT

TIRE ⇨
INSERTS ⇨
WHEELS ⇨

REAR

TIRE ⇨
INSERTS ⇨
WHEELS ⇨

OTHER

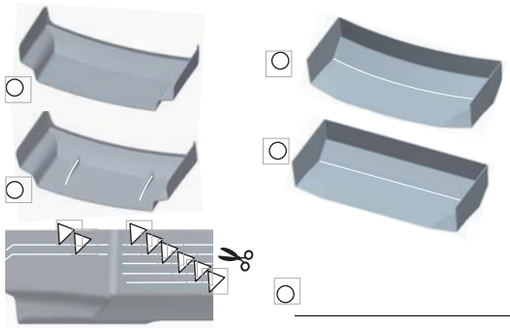

○

COMMENT

Editable by Arn0 at PetitRC.com