B-MAX4III SETTING SHEET

Arn0 - v1.0

DRIVER	Lee Martin
DATE	2014.01.05

CIRCUIT *Worksop*

● INDOOR ○ OUTDOOR *Cork*

○ WET ○ DRY ○ DUSTY ○ SMOOTH ○ BUMPY ○ OTHER

○ LOW TRACTION ○ MED TRACTION ○ HIGH TRACTION

○ CLAY ○ GRASS ○ BLUE GROOVE ○ ASTROTURF ○ DIRT ○ CARPET ○ WOOD

FRONT

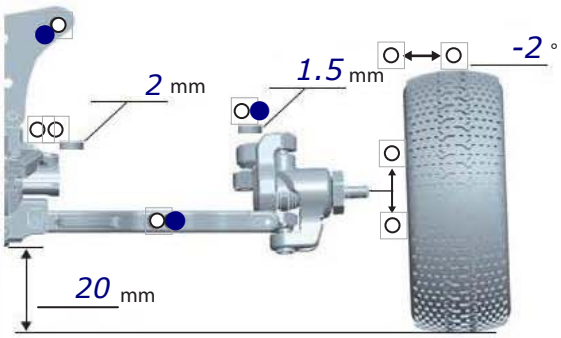

TOE-IN (+) / OUT(−) ____ °

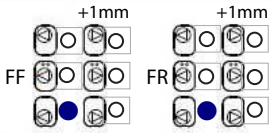

○ 1.0 ○ 1.1
○ 1.2 ○ 1.3
○ 1.4

○ BALL DIFF
● GEAR DIFF
10000

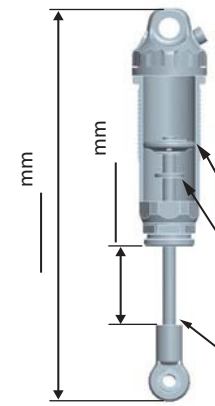

○ X SHOCK
SPRING
○ BLACK
● *AE Blue*
OIL *400 cst*
PRELOAD
○ #1 ○ #2 ○ #3 ○ #4
● *2x1.6mm*
0 mm x
0 mm x

Notes

REAR

____ mm
2 mm

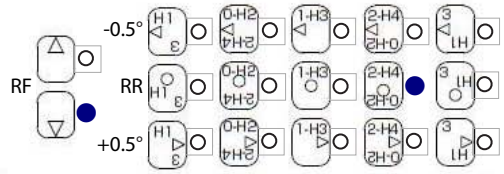

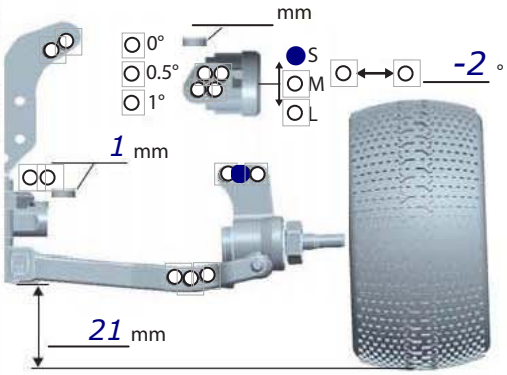

○ 1.0 ○ 1.1
○ 1.2 ● 1.3
○ 1.4 ○ 1.5
○ 1.6

○ BALL DIFF
● GEAR DIFF
10000

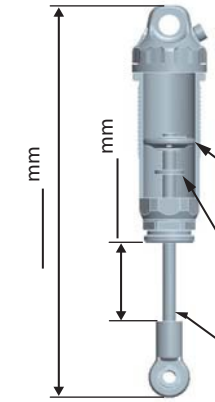

○ X SHOCK
SPRING
○ BLACK
● *AE Green*
OIL *350 cst*
PRELOAD
○ #1 ○ #2 ○ #3 ○ #4
● *2x1.7mm*
0 mm x
0 mm x

Notes

DRIVE

____ mm

MOTOR	*Yokomo 6.5*	○ BONDED ○ SINTERED ____ mm
GEAR	Spur *87* T / Pinion *20* T : 2.35	
BATTERY		
ESC	*Viper VTX10 BE*	
SETTING		

BATTERY PLACEMENT

TIRE

	FRONT	REAR
TIRE	*Schumacher Mini Pin Yellow*	*Schumacher Mini Pin Yellow*
INSERTS	*Answer RC Blue*	*Answer RC Blue*
WHEELS	*Yokomo*	*Yokomo*

OTHER

LMR wing

○ FULL LIP

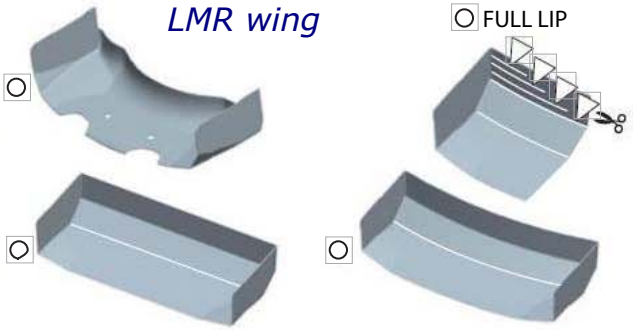

COMMENTS

Editable by Arn0 at PetitRC.com

2 screws removed from chassis brace - more flex