B-MAX4III SETTING SHEET

Arn0 - v1.0

DRIVER	Josh Pain	DATE	18/12/13

CIRCUIT *Starting Setup*

○ INDOOR ○ OUTDOOR *Dirt/Clay*

○ WET ○ DRY ○ DUSTY ○ SMOOTH ○ BUMPY ○ OTHER

○ LOW TRACTION ○ MED TRACTION ○ HIGH TRACTION

○ CLAY ○ GRASS ○ BLUE GROOVE ○ ASTROTURF ○ DIRT ○ CARPET ○ WOOD

FRONT

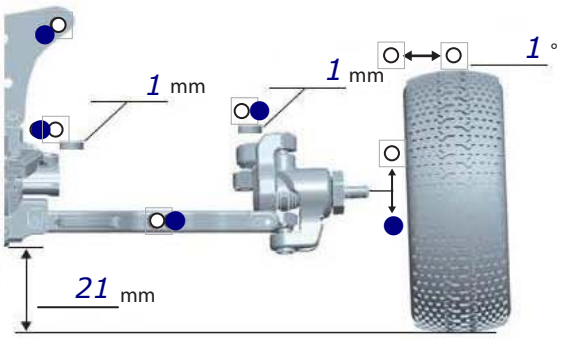

TOE-IN (+) / OUT(−) *-1* °

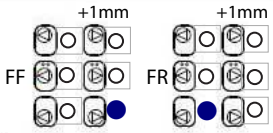

○ 1.0 ○ 1.1
○ 1.2 ○ 1.3
○ 1.4

○ BALL DIFF
● GEAR DIFF *5*

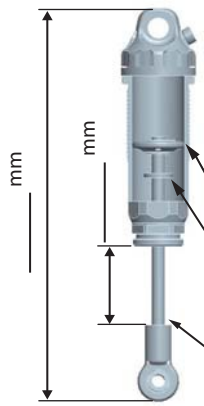

● X SHOCK
SPRING
○ BLACK
● *Blue AE*
OIL *35 losi*
PRELOAD
○ #1 ○ #2 ○ #3 ○ #4
● *2x1.6*

mm x *0*
mm x

Notes *Eyelet To bottom of threads*

REAR

mm
mm

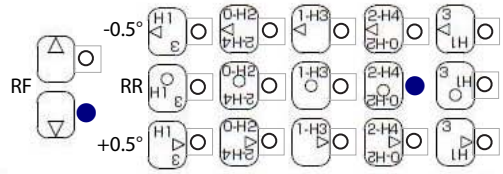

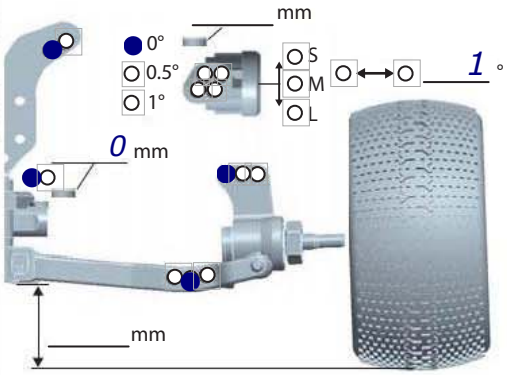

○ 1.0 ○ 1.1
○ 1.2 ● 1.3
○ 1.4 ○ 1.5
○ 1.6

○ BALL DIFF
● GEAR DIFF *3*

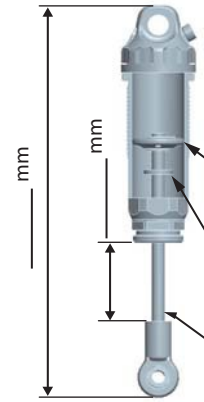

● X SHOCK
SPRING
○ BLACK
● *White AE*
OIL *30 losi*
PRELOAD
○ #1 ○ #2 ○ #3 ○ #4
● *2x1.7*

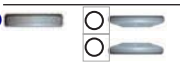

.8 mm x *3*
mm x

Notes *Eyelet To bottom of threads*

DRIVE

MOTOR	*LRP 6.5*	○ BONDED ● SINTERED	mm
GEAR	Spur	*87* T / Pinion	*17* T : 2.35
BATTERY			
ESC			
SETTING			

BATTERY PLACEMENT

TIRE

FRONT		**REAR**	
TIRE	*AKA Soft Rebar*	TIRE	*AKA Soft Rebar*
INSERTS	*AKA*	INSERTS	*AKA*
WHEELS	*AKA*	WHEELS	*AKA*

OTHER

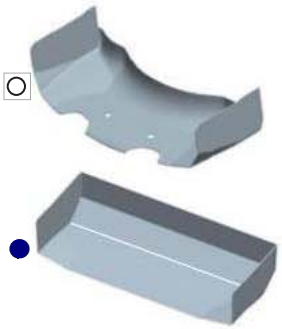

○ FULL LIP

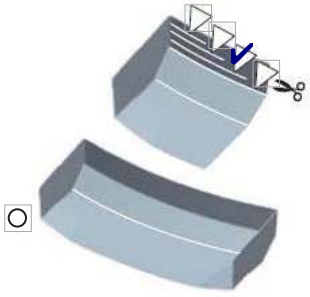

COMMENTS

Editable by Arn0 at PetitRC.com

bmax4-2 front and rear arms.