B-MAX4 III

Arn0

SETTING SHEET Ver.04

DRIVER *Josh Pain* | DATE *29/10/2014*

CIRCUIT *CORMACC*

○ INDOOR ● OUTDOOR

○ WET ● DRY ○ DUSTY ○ SMOOTH ● BUMPY ○ OTHER

○ LOW TRACTION ● MED TRACTION ● HIGH TRACTION

● CLAY ○ GRASS ● BLUE GROOVE ○ ASTROTURF ○ DIRT ○ CARPET ○ WOOD

FRONT

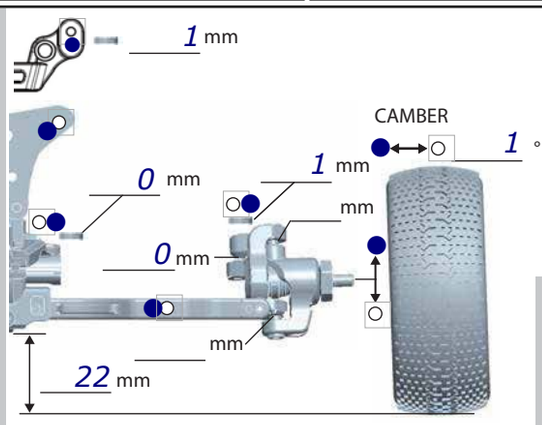

TOE-IN (+) / OUT (−) *-1* °

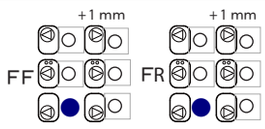

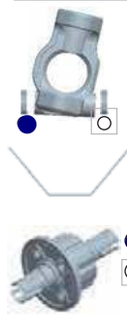

○ B4-413A8
● B4-413A15

○ 1.0 ○ 1.1
○ 1.2 ○ 1.3
○ 1.4 ○ 1.5
○ 1.6 ○ __

● BALL DIFF
○ GEAR DIFF
#

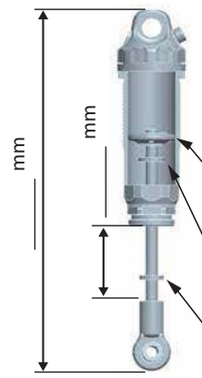

○ X SHOCK
SPRING
○ BLACK
● *AE Blue*

PRELOAD

OIL
losi 37.5

○ #1 ○ #2 ○ #3 ○ #4
● *1.6 x 2 black*

.8 mm x *4*

mm x

REAR

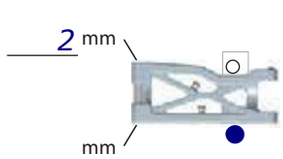

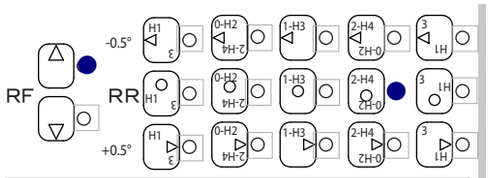

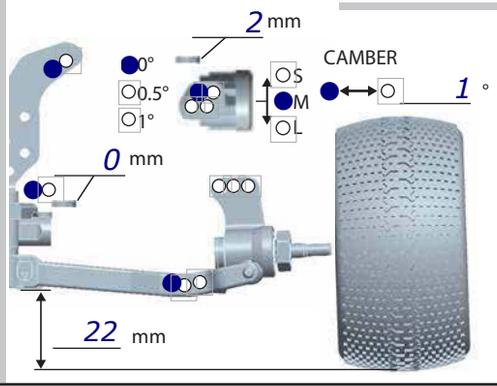

○ BM-008R
● B4-BWR

○ 1.0 ○ 1.1
○ 1.2 ○ 1.3
○ 1.4 ● 1.5
○ 1.6 ○ __

● BALL DIFF
○ GEAR DIFF
#

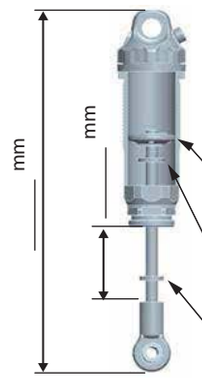

○ X SHOCK
SPRING
○ BLACK
● *AE White*

PRELOAD

OIL
losi 30

○ #1 ○ #2 ○ #3 ○ #4
●

.8 mm x *3*

black oring mm x

DRIVE

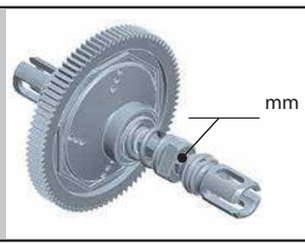

MOTOR ⇨ *RP 6.5* ○ Bonded ○ Sintered mm

GEAR ⇨ Spur *84* T / Pinion *21* T : 2.35

BATTERY ⇨ *Pro Amps 4200*

ESC ● Racing Performer X Series / / /

○ BL-R3 ○

Battery placement

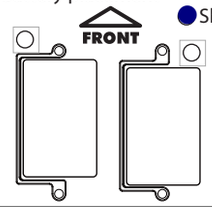

● Shorty

TIRE

FRONT

TIRE ⇨ *AKA Rebar*

INSERTS ⇨ *AKA*

WHEELS ⇨

REAR

TIRE ⇨ *AKA Rebar*

INSERTS ⇨ *AKA*

WHEELS ⇨

OTHER

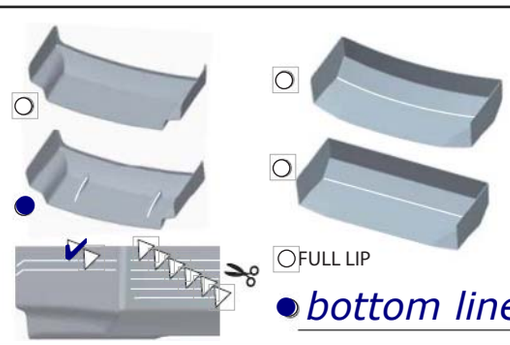

○ FULL LIP

● *bottom line*

COMMENT

Editable by Arn0 at PetitRC.com

PSM Carbon Chassis, Arrowmax drivehafts and ackerman plate Parts and yokomo Carbon top decks, plastic shock caps.