B-MAX4 III

Arn0

SETTING SHEET Ver.04

DRIVER Joel Valander **DATE** 13.12.2014

CIRCUIT Winter Jumps 2, Nokia

- ● INDOOR ○ OUTDOOR
- ○ WET ● DRY ○ DUSTY ● SMOOTH ○ BUMPY ○ OTHER
- ● LOW TRACTION ○ MED TRACTION ○ HIGH TRACTION
- ○ CLAY ○ GRASS ○ BLUE GROOVE ● ASTROTURF ○ DIRT ○ CARPET ○ WOOD

FRONT

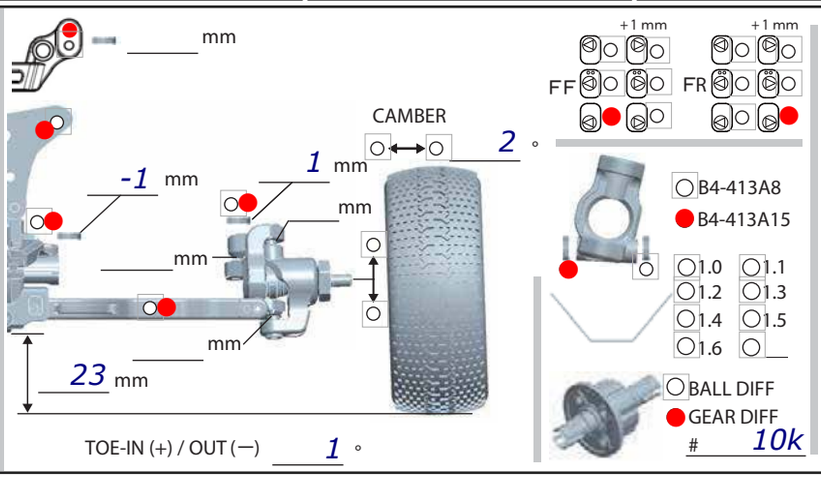

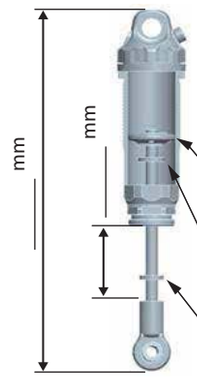

○ X SHOCK SPRING
○ BLACK
○ AE Blue

PRELOAD ____

OIL
37,5 TLR
○ #1 ○ #2 ○ #3 ○ #4
○ 1,6mm
● ○ ○

0,8 mm x 1

1 mm x 1

REAR

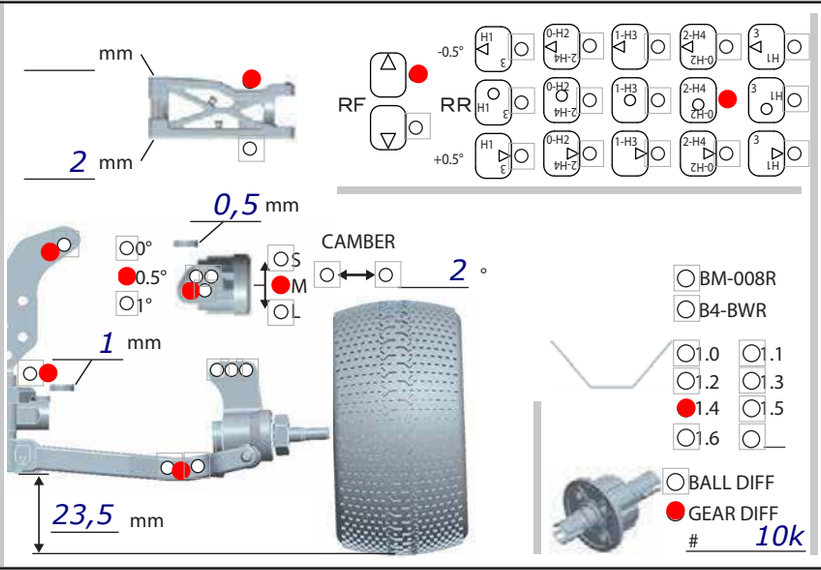

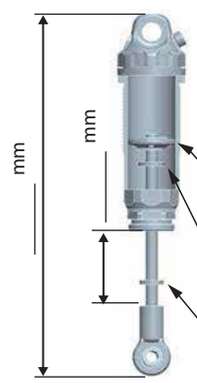

○ X SHOCK SPRING
○ BLACK
○ AE Green

PRELOAD ____

OIL
35 TLR
○ #1 ● #2 ○ #3 ○ #4
○ 1,7mm
● ○ ○

0,8 mm x 1

1 mm x 1

DRIVE

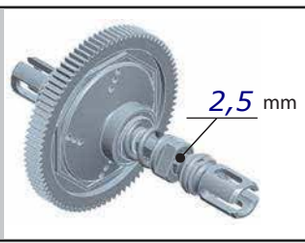

MOTOR ⇨ Hobbywing v10 6,5 ○ Bonded ○ Sintered mm

GEAR ⇨ Spur 84 T / Pinion 19 T : 2.35

BATTERY ⇨ Gens Ace

ESC ○ Racing Performer X Series / / /

○ BL-R3 ● Hobbywing v3.1

Battery placement ● Shorty

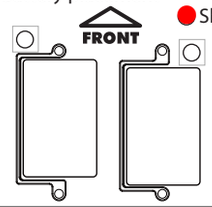

TIRE

FRONT

TIRE ⇨ Minipin

INSERTS ⇨ EOS preglued

WHEELS ⇨ ____

REAR

TIRE ⇨ Minipin

INSERTS ⇨ EOS preglued

WHEELS ⇨ ____

OTHER

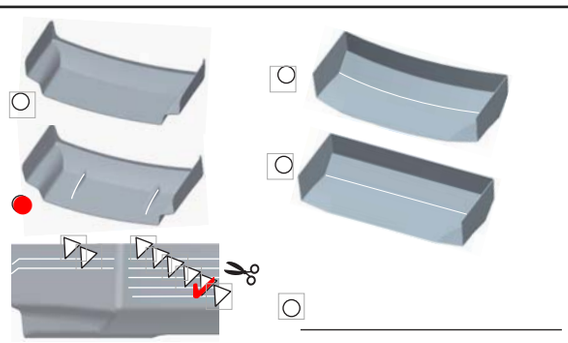

○ ____

COMMENT

Editable by Arn0 at PetitRC.com

Concrete floor with astroturf on jumps.