B-MAX4 III

Arn0

SETTING SHEET Ver.04

DRIVER Jeremy Hong **DATE** 31st May 2015

CIRCUIT Raceworks Hobbies

○ INDOOR ● OUTDOOR
○ WET ● DRY ● DUSTY ○ SMOOTH ● BUMPY ○ OTHER
● LOW TRACTION ○ MED TRACTION ○ HIGH TRACTION
○ CLAY ○ GRASS ○ BLUE GROOVE ○ ASTROTURF ● DIRT ○ CARPET ○ WOOD

FRONT

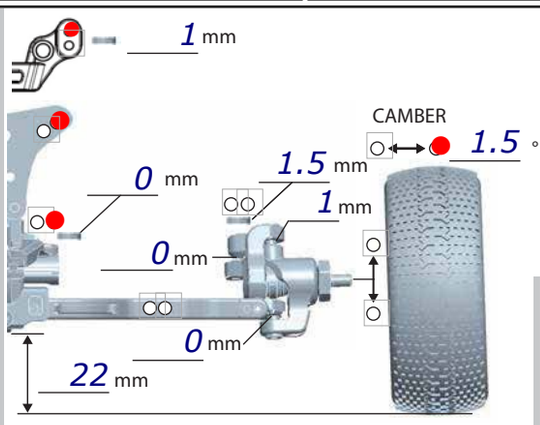

TOE-IN (+) / OUT (−) 0 °

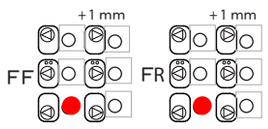

○ B4-413A8
○ B4-413A15

○ 1.0 ○ 1.1
○ 1.2 ○ 1.3
○ 1.4 ○ 1.5
○ 1.6 ○ ___

○ BALL DIFF
● GEAR DIFF
10000

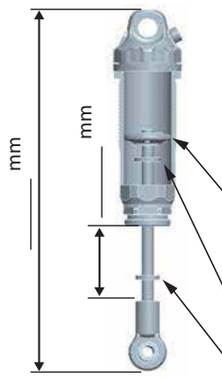

○ X SHOCK
SPRING
○ BLACK
● Yok Orange

PRELOAD ___

OIL
450

○ #1 ○ #2 ○ #3 ○ #4
○ 2x1.6

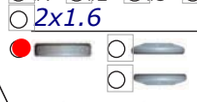

1 mm x 1

mm x

REAR

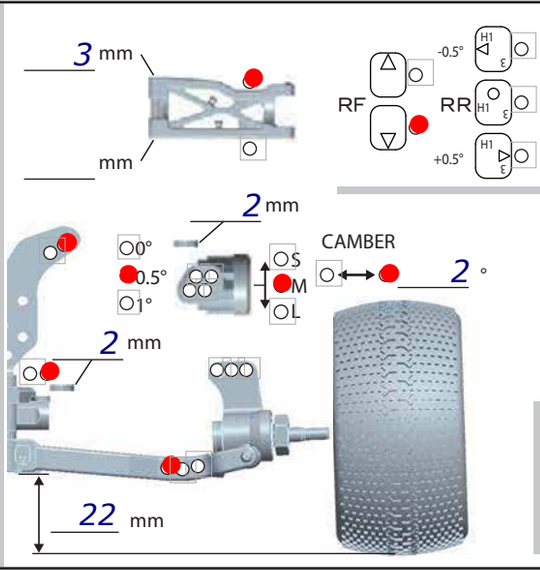

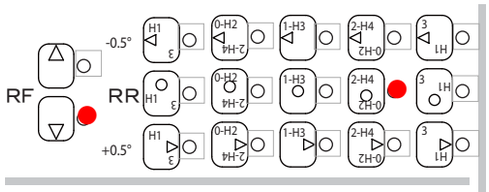

○ BM-008R ○ Z2-415R00
○ B4-BWR ○ ___

○ 1.0 ○ 1.1
○ 1.2 ○ 1.3
○ 1.4 ○ 1.5
○ 1.6 ○ ___

○ BALL DIFF
● GEAR DIFF
5000

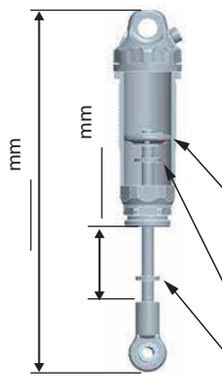

○ X SHOCK
SPRING
○ BLACK
○ Yok Green

PRELOAD ___

OIL
400

○ #1 ○ #2 ○ #3 ○ #4
○ 2x1.7

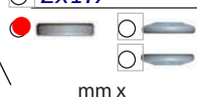

mm x

1 mm x 2

DRIVE

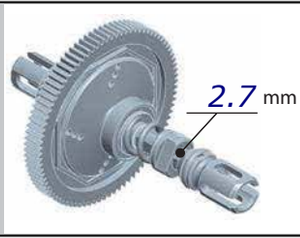

MOTOR ⇨ Nosram Evo 2 6.5T ○ Bonded ○ Sintered mm

GEAR ⇨ Spur 84 T / Pinion 19 T : 2.35

BATTERY ⇨ IP Shorty

ESC ○ Racing Performer X Series / / /

○ BL-R3 ● Orion R10.1 Pro

Battery placement ● Shorty

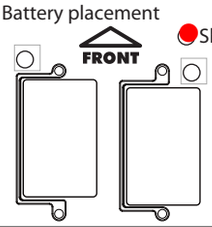

TIRE

FRONT

TIRE ⇨ Sweep Square Armor (Orange Compound)
INSERTS ⇨ Stock
WHEELS ⇨ Yokomo Standard

REAR

TIRE ⇨ Sweep Square Armor (Orange Compound)
INSERTS ⇨ Stock
WHEELS ⇨ Yokomo Standard

OTHER

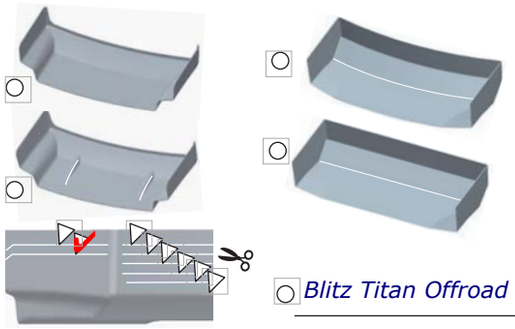

○ Blitz Titan Offroad Wing

COMMENT

Editable by Arn0 at PetitRC.com

Full Ti Screws
Yokomo 4mm Front Carbon Shock Tower
BMax 4-3 Lightweight chassis

Qualified 2nd, Finished 1st.