B-MAX4 III

Arn0

SETTING SHEET

Ver.01

DRIVER _____ **DATE** _____

CIRCUIT

○ INDOOR ○ OUTDOOR

○ WET ○ DRY ○ DUSTY ○ SMOOTH ○ BUMPY ○ OTHER

○ LOW TRACTION ○ MED TRACTION ○ HIGH TRACTION

○ CLAY ○ GRASS ○ BLUE GROOVE ○ ASTROTURF ○ DIRT ○ CARPET ○ WOOD

FRONT

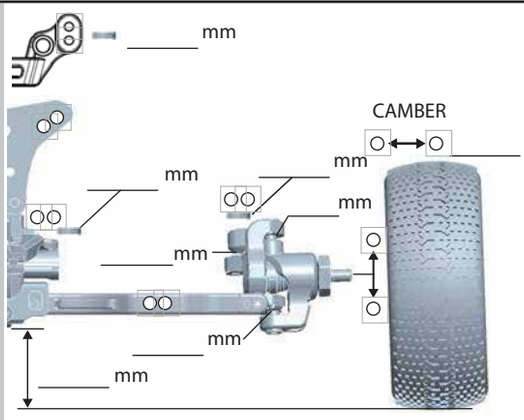

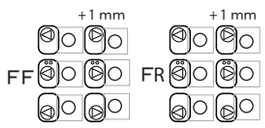

○ 1.0 ○ 1.1
○ 1.2 ○ 1.3
○ 1.4 ○ __

○ BALL DIFF
○ GEAR DIFF
#

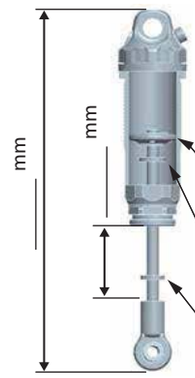

○ X SHOCK
SPRING
○ BLACK
○ _____

PRELOAD _____

OIL
_____

○ #1 ○ #2 ○ #3 ○ #4
○ _____

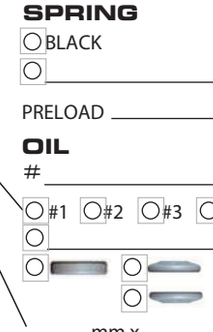

mm x _____

mm x _____

REAR

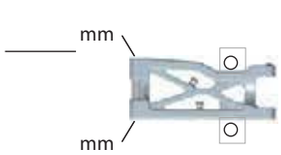

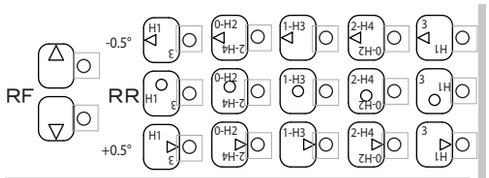

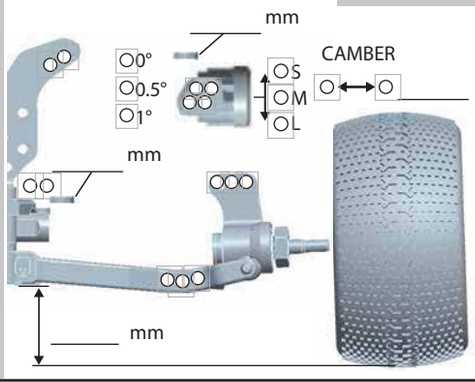

○ BM-008R
○ B4-BWR

○ 1.0 ○ 1.1
○ 1.2 ○ 1.3
○ 1.4 ○ 1.5
○ 1.6 ○ __

○ BALL DIFF
○ GEAR DIFF
_____

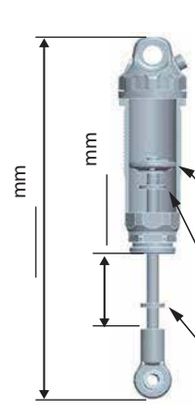

○ X SHOCK
SPRING
○ BLACK
○ _____

PRELOAD _____

OIL
_____

○ #1 ○ #2 ○ #3 ○ #4
○ _____

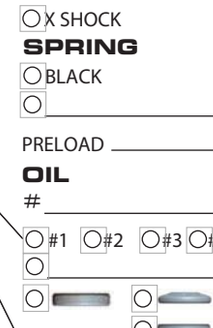

mm x _____

mm x _____

DRIVE

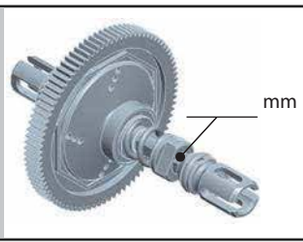

MOTOR ⇨ _____ ○ Bonded ○ Sintered mm

GEAR ⇨ Spur T ／ Pinion T : 2.35

BATTERY ⇨ _____

ESC ○ NOSRAM / / /

○ BL-R3 ○ _____

Battery placement

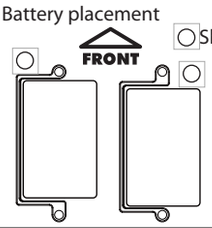

○ Shorty

TIRE

FRONT

TIRE ⇨ _____

INSERTS ⇨ _____

WHEELS ⇨ _____

REAR

TIRE ⇨ _____

INSERTS ⇨ _____

WHEELS ⇨ _____

OTHER

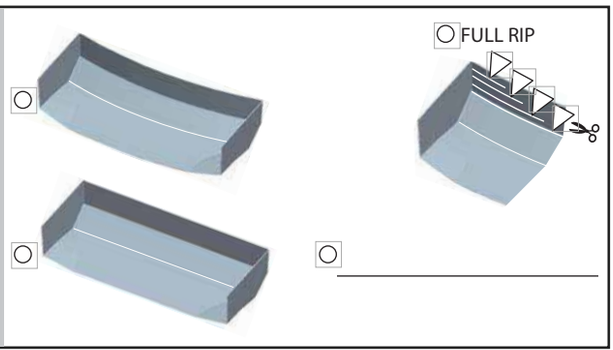

○ _____

COMMENT

Editable by Arn0 at PetitRC.com