B-MAX4 III

Arn0

SETTING SHEET Ver.04

DRIVER	Chris Sturdy	DATE	31/05/2015

CIRCUIT Sunshine Coast

○ INDOOR ● OUTDOOR
○ WET ● DRY ● DUSTY ○ SMOOTH ● BUMPY ○ OTHER
● LOW TRACTION ○ MED TRACTION ○ HIGH TRACTION
● CLAY ○ GRASS ○ BLUE GROOVE ○ ASTROTURF ○ DIRT ○ CARPET ○ WOOD

FRONT

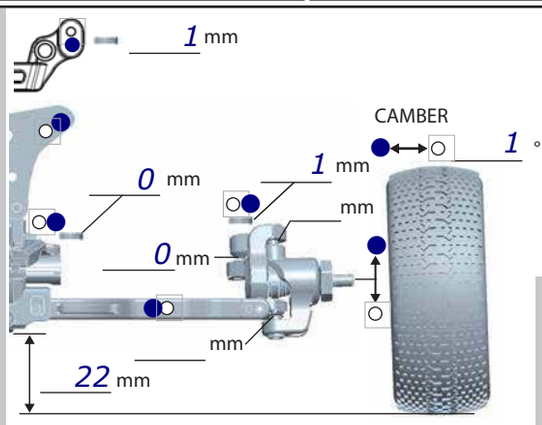

TOE-IN (+) / OUT (−) -1 °

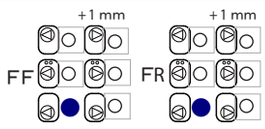

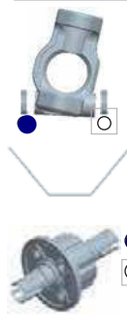

○ B4-413A8
○ B4-413A15

○ 1.0 ○ 1.1
○ 1.2 ○ 1.3
○ 1.4 ○ 1.5
○ 1.6 ○ __

● BALL DIFF
○ GEAR DIFF
#

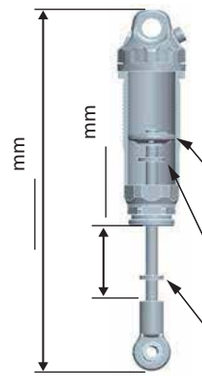

○ X SHOCK SPRING
○ BLACK
● AE Blue

PRELOAD

OIL
losi 37.5

○ #1 ○ #2 ○ #3 ○ #4
● 1.6 x 2

.8 mm x 4

mm x

REAR

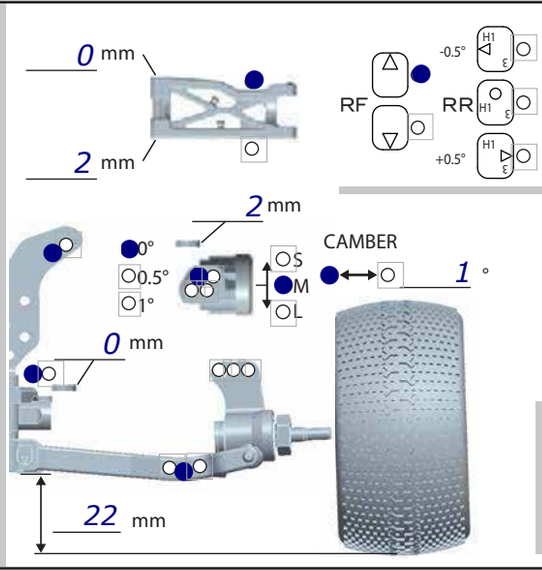

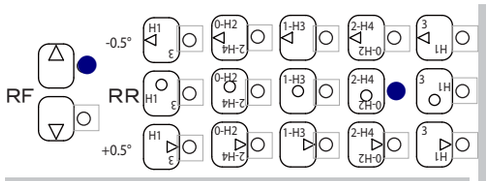

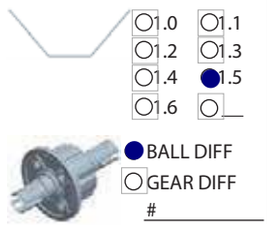

○ BM-008R
● B4-BWR

○ 1.0 ○ 1.1
○ 1.2 ○ 1.3
○ 1.4 ● 1.5
○ 1.6 ○ __

● BALL DIFF
○ GEAR DIFF
#

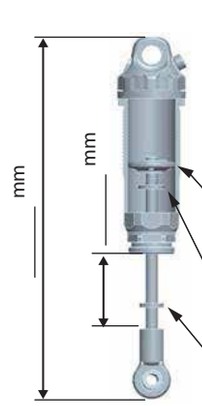

○ X SHOCK SPRING
○ BLACK
● AE White

PRELOAD

OIL
losi 30

○ #1 ○ #2 ○ #3 ○ #4
● 1.7 x 2

.8mm x 3

3mm x

DRIVE

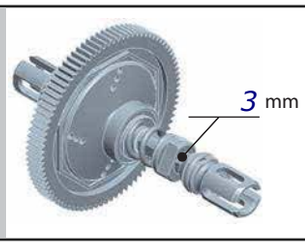

MOTOR ⇨ Fantom Ion5 6.5T ○ Bonded ○ Sintered mm

GEAR ⇨ Spur T / Pinion T : 2.35

BATTERY ⇨ Fantom Killer Voltz 4600

ESC ○ Racing Performer X Series / / /

○ BL-R3 ● Hobbywing V3.1

Battery placement ● Shorty

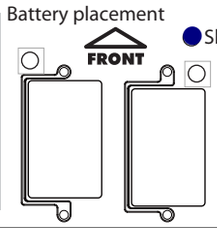

TIRE

FRONT

TIRE ⇨ Jconcepts Double Dees
INSERTS ⇨ Jconcepts And-1
WHEELS ⇨ Yokomo

REAR

TIRE ⇨ Jconcepts Double Dees
INSERTS ⇨ Jconcepts And-1
WHEELS ⇨ Yokomo

OTHER

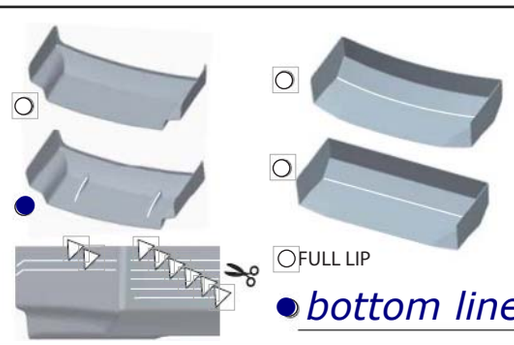

○ FULL LIP

● bottom line

COMMENT

Editable by Arn0 at PetitRC.com

Plastic Shock Caps
Ti Screw Kit
Ti Turnbuckles
Alloy Steering plate