B-MAX4III SETTING SHEET

Arn0 - v1.0

DRIVER	Björn Prümper	DATE	17.11.2013

CIRCUIT Solmser Indoor Masters

- ● INDOOR ○ OUTDOOR
- ○ WET ○ DRY ○ DUSTY ○ SMOOTH ○ BUMPY ○ OTHER
- ● LOW TRACTION ○ MED TRACTION ○ HIGH TRACTION
- ○ CLAY ○ GRASS ○ BLUE GROOVE ○ ASTROTURF ○ DIRT ● CARPET ○ WOOD

FRONT

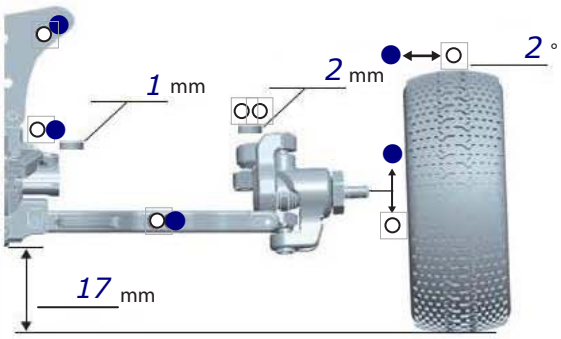

TOE-IN (+) / OUT(−) 1 °

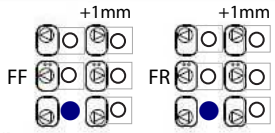

○ 1.0 ○ 1.1
○ 1.2 ○ 1.3
○ 1.4 1.5

○ BALL DIFF
● GEAR DIFF
10k

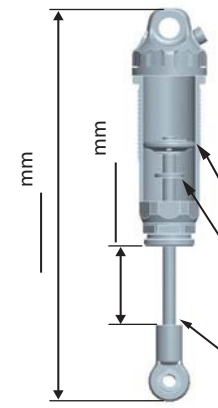

● X SHOCK
SPRING
○ BLACK
● AE Purple
OIL 50 Losi
PRELOAD
○ #1 ○ #2 ○ #3 ○ #4
○ 2x1.6mm
mm x
mm x

Notes limiters stock

REAR

mm
All mm

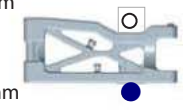

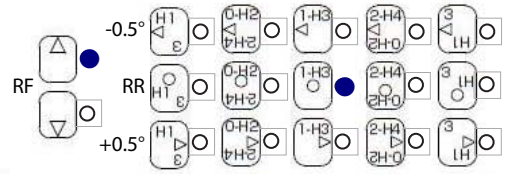

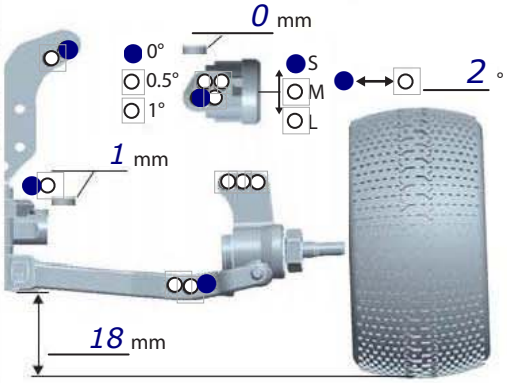

○ 1.0 ○ 1.1
○ 1.2 ○ 1.3
○ 1.4 ○ 1.5
● 1.6

○ BALL DIFF
● GEAR DIFF
10K

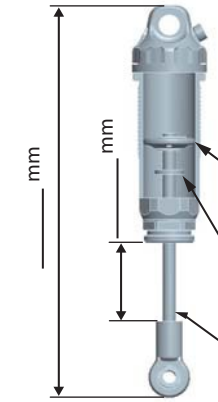

○ X SHOCK
SPRING
○ BLACK
● AE Yellow
OIL 42.5 Losi
PRELOAD
○ #1 ○ #2 ○ #3 ○ #4
● 2x1.6mm
Stock mm x
3 mm x

Notes

DRIVE

mm

MOTOR	HW		○ BONDED ○ SINTERED mm
GEAR	Spur	Kit T / Pinion	Kit T : 2.35
BATTERY	Nvision		
ESC	HW		
SETTING			

BATTERY PLACEMENT

TIRE

FRONT		REAR	
TIRE	Schumacher Mini Pin Yellow	TIRE	Schumacher Mini Pin Yellow
INSERTS	AKA	INSERTS	AKA
WHEELS	Stock	WHEELS	Stock

OTHER

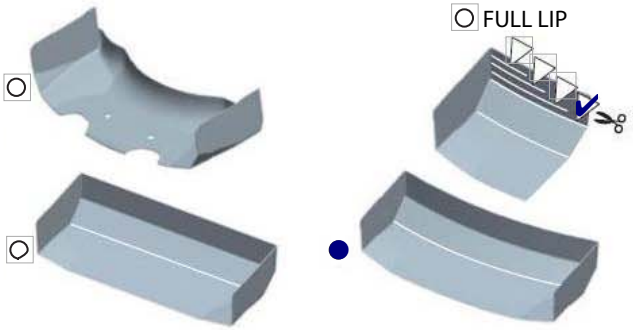

COMMENTS

Editable by Arn0 at PetitRC.com

No rear weight