B-MAX2 MR SETTING SHEET P040

DRIVER

DATE / /

CIRCUIT

○ INDOOR ○ OUTDOOR
○ WET ○ DRY ○ DUSTY ○ OTHER
○ LOW TRACTION ○ MED TRACTION ○ HIGH TRACTION
○ SMOOTH ○ BUMPY ○ BIUE GROOVE ○ ASTROTURF
○ CARPET ○ WOOD

FRONT

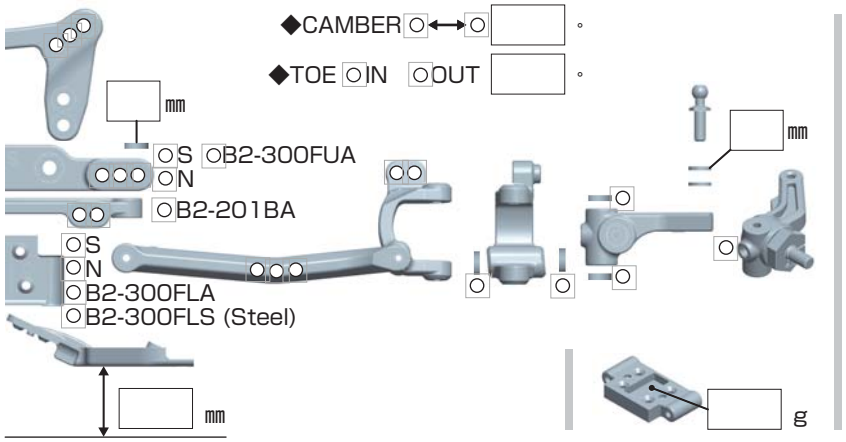

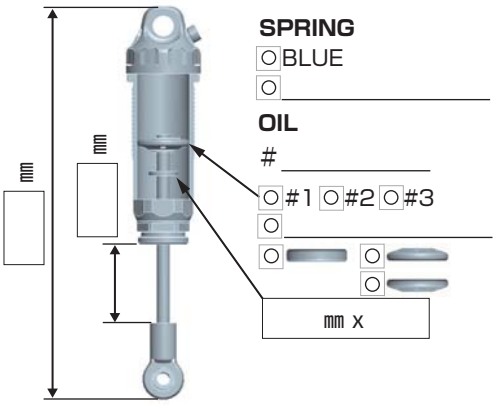

REAR

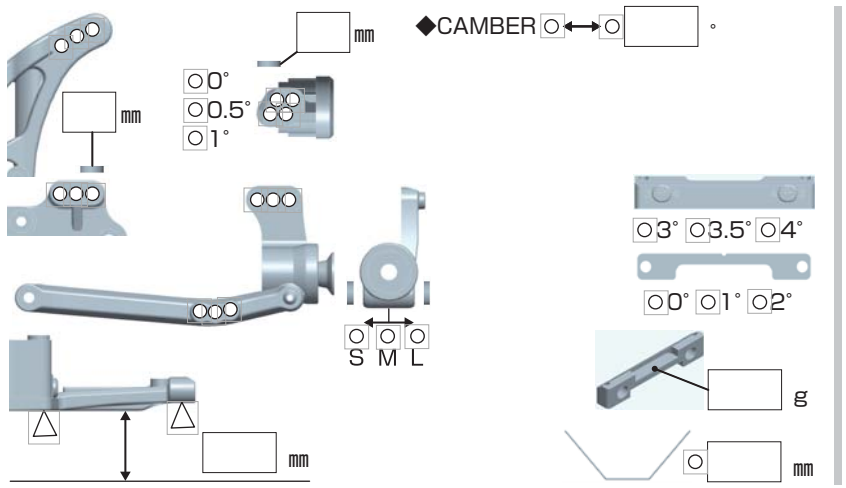

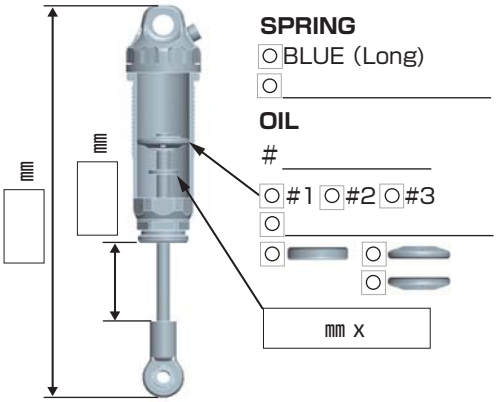

DRIVE

Midship

Rear motor

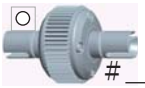

#

○ Bonded
○ Sintered mm

MOTOR ➪

GEAR ➪ Spur T ／ Pinion T : 2.6

BATTERY ➪

ESC ○ Racing Performer X Series

○ BL-R3 ○

Battery placement

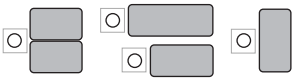

Main chassis
○ B2-002MR : Mold
○ B2-002MRA : Aluminum
○ B2-002MW : Al 1piece

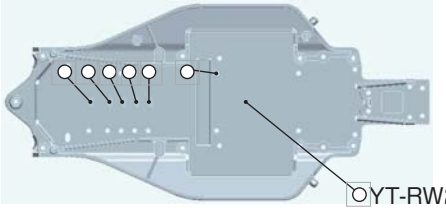

○ YT-RW25

TIRE

FRONT		REAR	
TIRE ➪		TIRE ➪	
INSERTS ➪		INSERTS ➪	
WHEELS ➪		WHEELS ➪	

OTHER

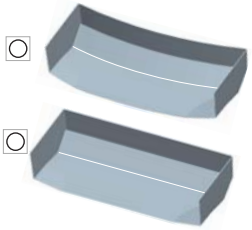

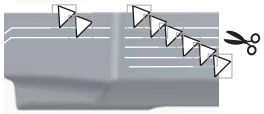

○

COMMENT