SET-UP SHEET

XRAY XB8E'16

RACE	
TRACK	

NAME	
CITY / COUNTRY	
CONTACT	
DATE	

TEMPERATURE AIR		TEMPERATURE TRACK	

LAPS	FINAL POSITION	BEST LAPTIME	RACE LENGTH
		/sec	/min

TRACKS

SIZE	☐ OPEN	☐ MEDIUM	☐ TIGHT
TRACTION	☐ LOW	☐ MEDIUM	☐ HIGH
SURFACE	☐ SMOOTH	☐ MEDIUM	☐ BUMPY
TYPE	☐ HARD PACKED ☐ BLUE GROVE	☐ SOFT DIRT ☐ ASTRO TURF	☐ CLAY ☐ GRASS
CONDITION	☐ DRY	☐ DUSTY ☐ WET	☐ MUD

DIFFERENTIAL

	FRONT	CENTER	REAR
TYPE			
OIL			

GEARING

CLUTCH BELL	/T	/T	SPUR GEAR
PINION	/T	/T	CROWN GEAR
SHOE			SPRING

SHOCKS

FRONT		REAR
	LINEAR / SPRINGS / PROGRESSIVE	
/cSt	OIL	/cSt
/%	REBOUND	/%
☐ 6 HOLES ☐ 8 HOLES ☐ 10 HOLES	PISTONS 1.1 mm 1.2 mm 1.3 mm 1.4 mm	6 HOLES ☐ 8 HOLES ☐ 10 HOLES ☐
	OTHER PISTONS	

ANTI ROLL BAR

FRONT		REAR
/mm	THICKNESS	/mm

TIRES

FRONT		REAR
	TYPE	
	INSERTS	
	WHEELS	

ENGINE

TYPE	
MUFFLER	
MANIFOLD	
PLUG	
FUEL	

BODY

TYPE	

FRONT ● APPLIED ☒ REAR

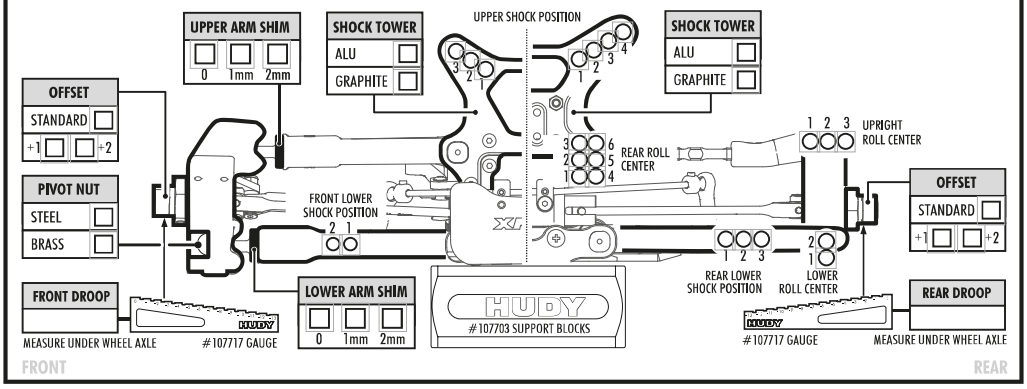

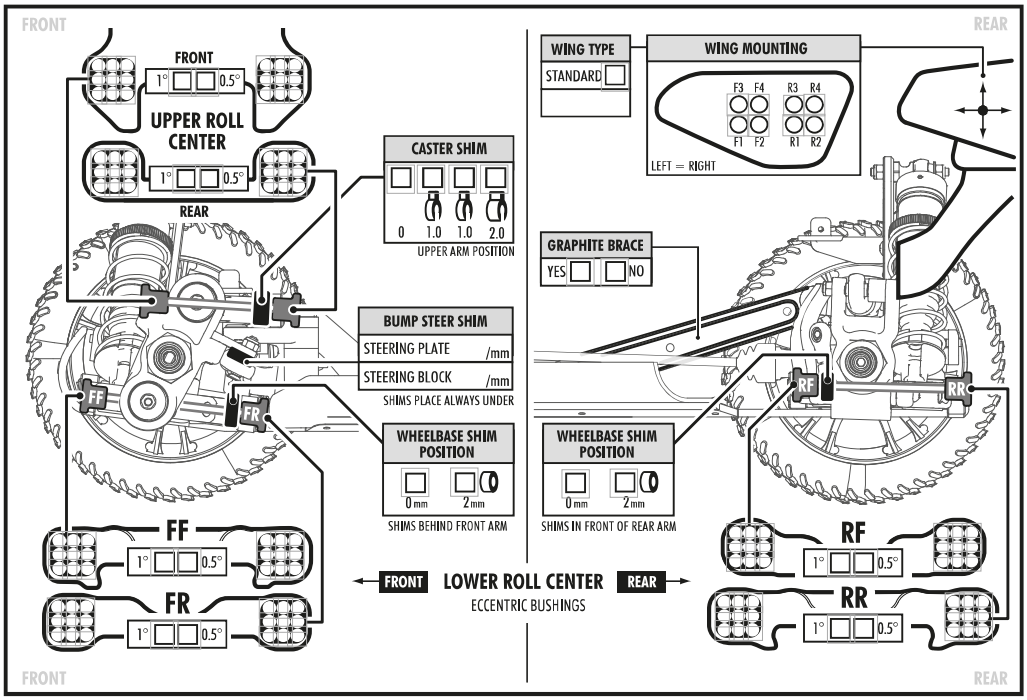

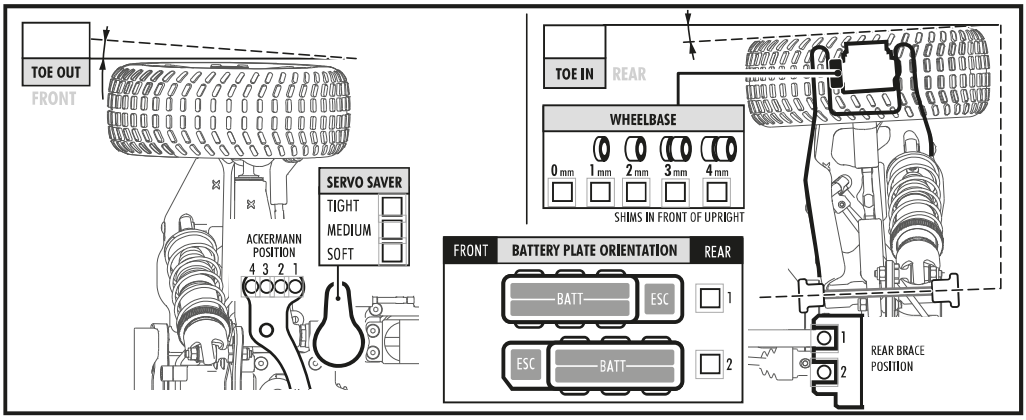

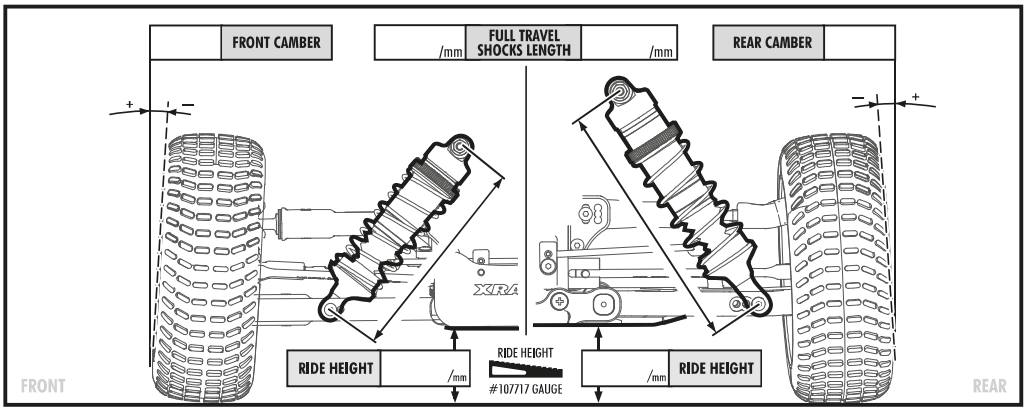

COMMENTS