SET-UP SHEET

XRAY XB4 2WD

Alterations by Arn0 at Petitrc.com

RACE	2014 oOple Series
TRACK	Stotfold

NAME	Stu Wood		
CITY		COUNTRY	UK
CONTACT		DATE	26.04.2014

TEMPERATURE	AIR °F or °C	TRACK °F or °C	

LAPS		BEST LAP TIME	sec
QUALIFING POSITION		FINAL POSITION	

TRACK SIZE	☐ OPEN	☑ MEDIUM	☐ TIGHT
TRACK TRACTION	☑ HIGH	☐ MEDIUM	☐ LOW
TRACK SURFACE	☐ SMOOTH	☑ MEDIUM	☐ BUMPY
TRACK TYPE	☐ HARD PACKED	☐ SOFT DIRT	☐ CLAY
	☐ CARPET	☐ BLUE GROOVE	☑ ASTRO TURF	☐ GRASS
TRACK CONDITION	☑ DRY	☐ DUSTY	☐ WET	☐ MUD

FRONT	DIFFERRENTIAL	REAR
	TYPE	☑ GEAR DIFF ☐ BALL DIFF
	PINION	☐ COMPOSITE ☑ METALLIC
	CROWN GEAR	☑ COMPOSITE
	OIL	20000 cSt

GEARING			
PINION	20 T	SPUR GEAR	87 T

FRONT	SHOCKS	REAR
3 dot	SPRINGS	1 dot
cSt 450	OIL	350 cSt
% 10	REBOUND	10 %
mm 0	DOWNSTOP SHIM	0 mm
YES ☐ ☑ NO	UPSTOP TRAVEL ORING	YES ☐ ☑ NO

PISTONS

	DIAMETER HOLES	
☑ 2 HOLES	☐ ø1.0mm	☐ 2 HOLES
☐ 3 HOLES	☐ ø1.1mm	☐ 3 HOLES
☐ 6 HOLES	☐ ø1.2mm	☐ 6 HOLES
	☐ ø1.3mm	
	☐ ø1.4mm	

CUSTOM PISTONS

	DIAMETER HOLES	
HOLES	ø mm	ø 1.6 mm	3 HOLES

FRONT	ANTI ROLL BAR	REAR
mm	THICKNESS	mm

FRONT	TIRES	REAR
Staggered	TYPE	Sch Yellow
	INSERTS	Medium
	WHEELS	STD

OTHER	
MOTOR	Hacker 7.5
ROTOR	Std
TIMING	Std
ESC	Hacker Tensonic
BATTERIES	Hacker Top Fuel
BODY	Std

COMMENTS

Short wheelbase
Brass rear suspension hinges
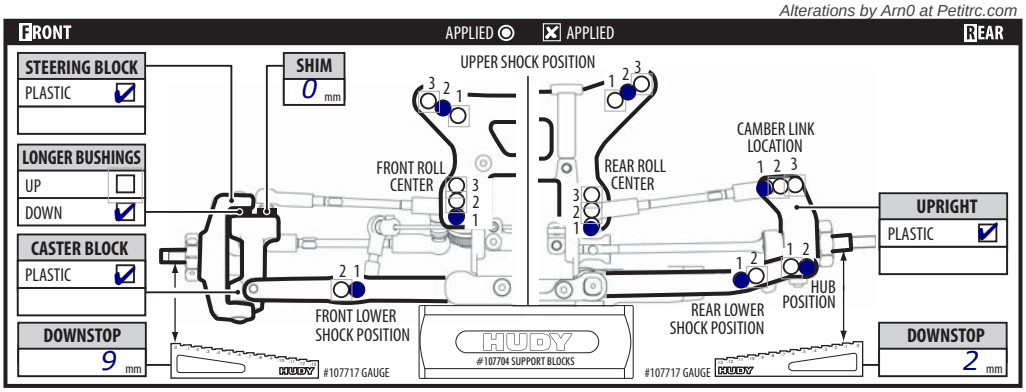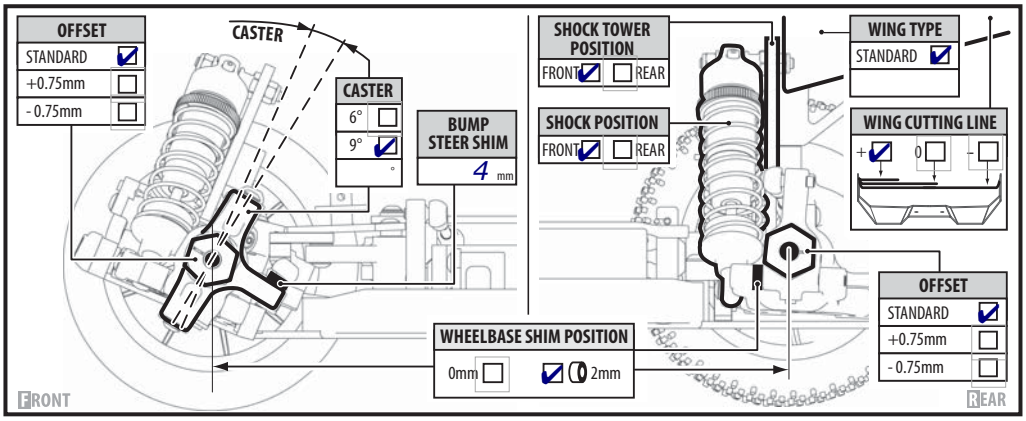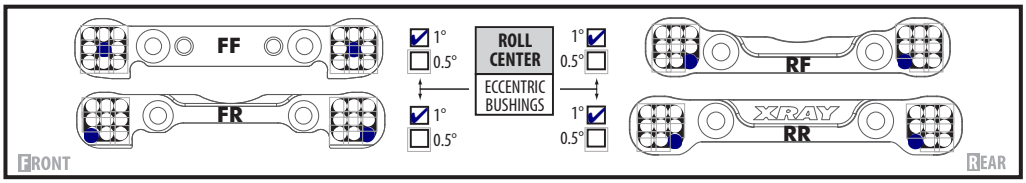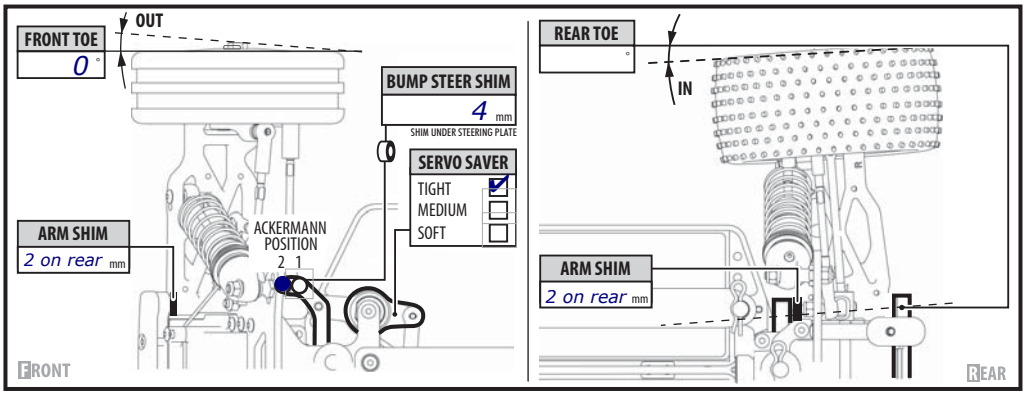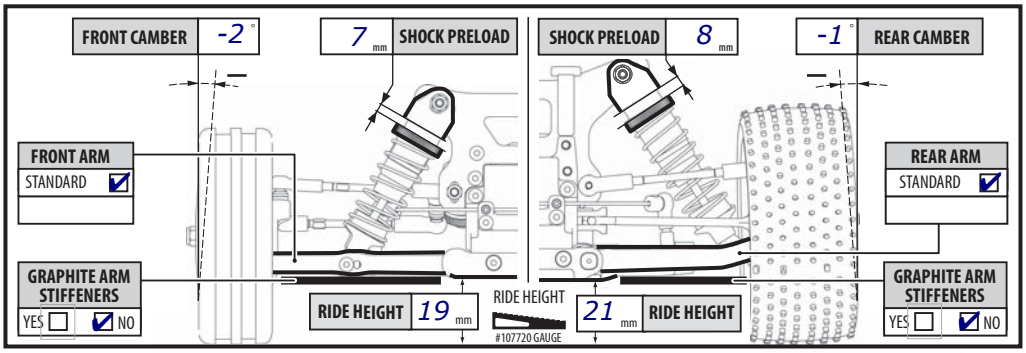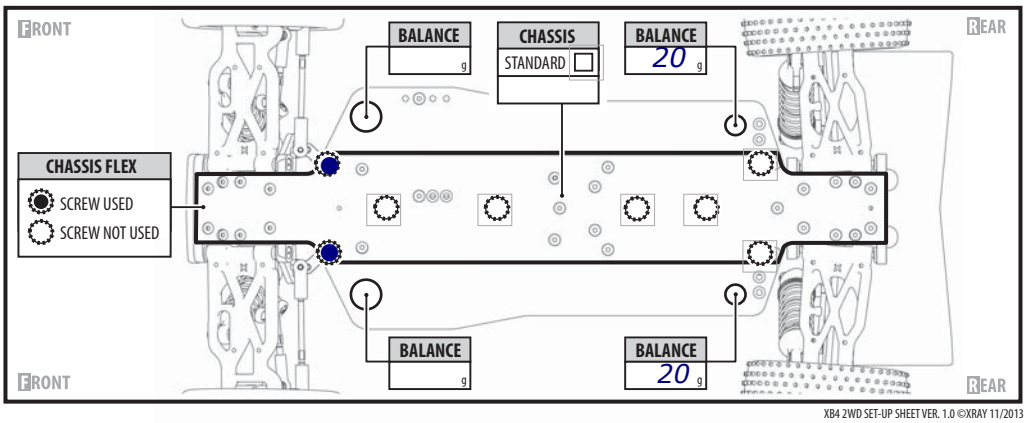
FRONT — APPLIED ◉ ☒ APPLIED — REAR