# SET-UP SHEET

# XRAY XB4'22

| | | | |
|---|---|---|---|
| RACE | Club Race | | |
| TRACK | Limitless RC | | |
| NAME | Jeff Hodges | DATE | |

| | | | |
|---|---|---|---|
| LAPS | | BEST LAP TIME | sec |
| QUALIFYING POSITION | | FINAL POSITION | |

## TRACK

| | | | |
|---|---|---|---|
| SIZE | ☐ OPEN | ☐ MEDIUM | ☒ TIGHT |
| TRACTION | ☐ ☐ ☐ ☐ ☐ ☐ ☐ ☒ ☐ | | |
| | VERY-LOW | MEDIUM | VERY-HIGH |
| SURFACE | ☒ SMOOTH | ☐ MEDIUM | ☐ BUMPY |
| TYPE | ☐ CLAY | ☒ CARPET | ☐ ASTRO |
| CONDITION | ☐ BLUE GROOVE | ☐ HARD PACKED | ☒ DRY |
| | ☐ DUSTY | ☐ LOAMY | ☐ WET |

## DIFFERENTIAL TYPE

| FRONT ↓ | MIDDLE ↓ | REAR ↓ |
|---|---|---|
| GEAR DIFF ☒ | GEAR DIFF ☐ | GEAR DIFF ☒ |
| BALL DIFF ☐ | SLIPPER ☒ | BALL DIFF ☐ |
| ACTIVE DIFF ☐ | ACTIVE DIFF ☐ | ACTIVE DIFF ☐ |
| 60° 90° 120° | 60° 90° 120° | 60° 90° 120° |
| OIL 20K cSt | OIL cSt | OIL 20K cSt |

### SATELLITE GEARS

| | | |
|---|---|---|
| COMPOSITE ☒ | COMPOSITE ☐ | COMPOSITE ☒ |
| STEEL ☐ | STEEL ☐ | STEEL ☐ |

40T ☒ ☐ 41T — CROWN GEAR — 40T ☒ ☐ 41T

## CENTRAL SLIPPER & ONE-WAY SETTING

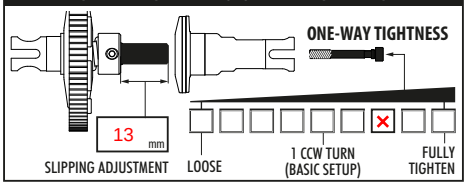


## GEARING

PINION 24 T — 78 T CENTER DIFF SPUR

| FRONT | SHOCKS | REAR |
|---|---|---|
| 4D / Shrt | SPRINGS | 3D / Shrt |
| cSt 650 | OIL | 550 cSt |
| % zero | REBOUND | zero % |
| ☒ 2 HOLES | PISTONS | ☒ 2 HOLES |
| ☐ 3 HOLES | ☐ ø1.2mm ☐ | ☐ 3 HOLES |
| ☐ 6 HOLES | ☐ ø1.3mm ☐ | ☐ 6 HOLES |
| HOLES | ☐ ø1.4mm ☐ | HOLES |
| | ☒ ø1.6mm ☐ | |
| | ☐ ø1.7mm ☒ | |
| | CUSTOM PISTONS | |
| | ø mm ø mm | |

| FRONT | ANTI ROLL BAR | REAR |
|---|---|---|
| 1.6 mm | THICKNESS | 1.8 mm |

| FRONT | TIRES | REAR |
|---|---|---|
| FuzzBite | BRAND | Prism |
| Pink | COMPOUND | CR3 |
| Gray | INSERTS | White |
| Xray | WHEELS | Xray |

## ELECTRONICS

| | | | |
|---|---|---|---|
| MOTOR | 13.5 | HW XR10 Pro | SPEEDO |
| MOTOR TIMING | 48* | SMC | BATTERY |

BATTERY SIZE: STD. SHORT ☐ ☐ LOW SHORT

## BODY

TYPE: Kit — STANDARD ☒ ☐ LIGHT

## COMMENTS
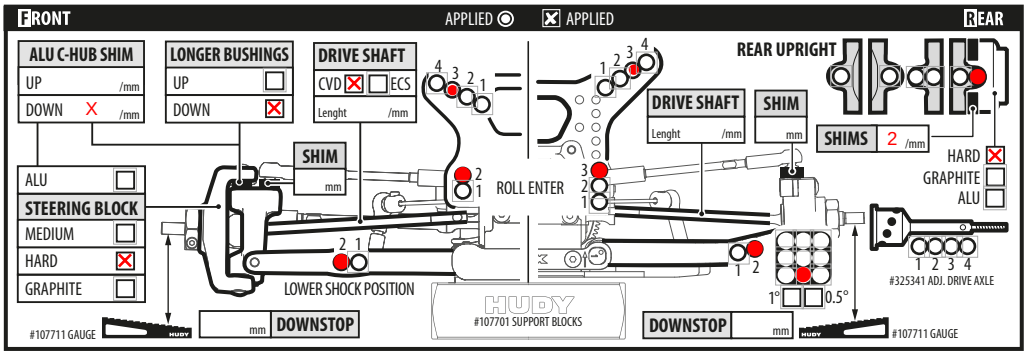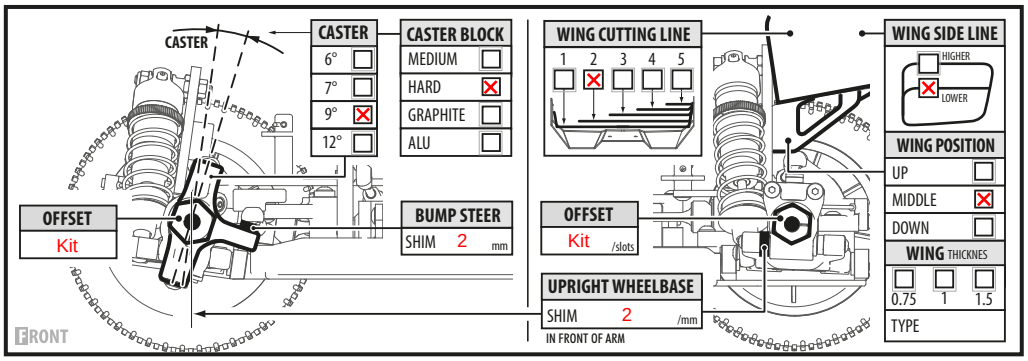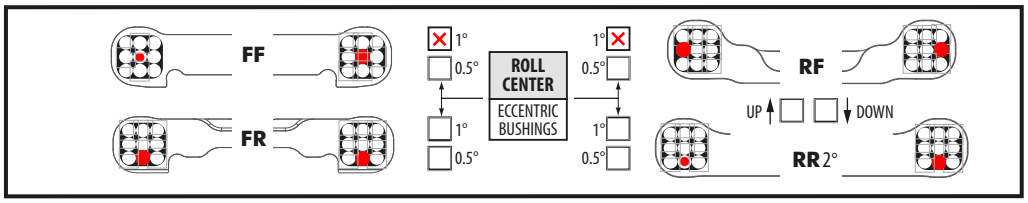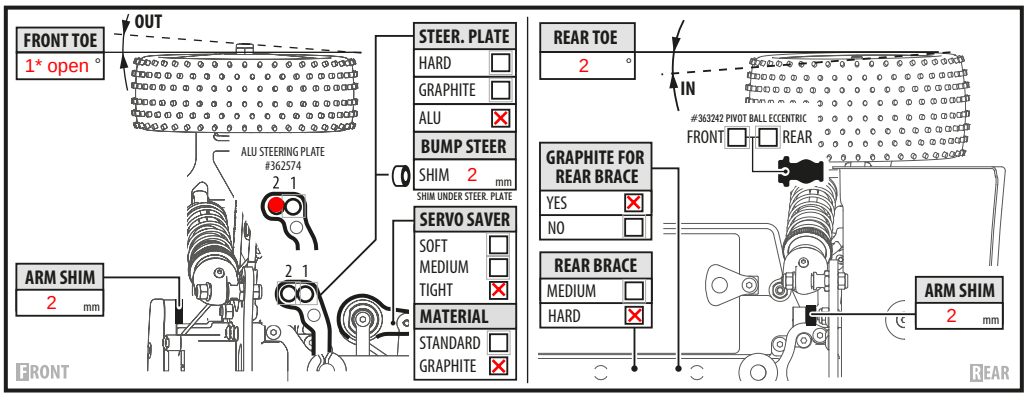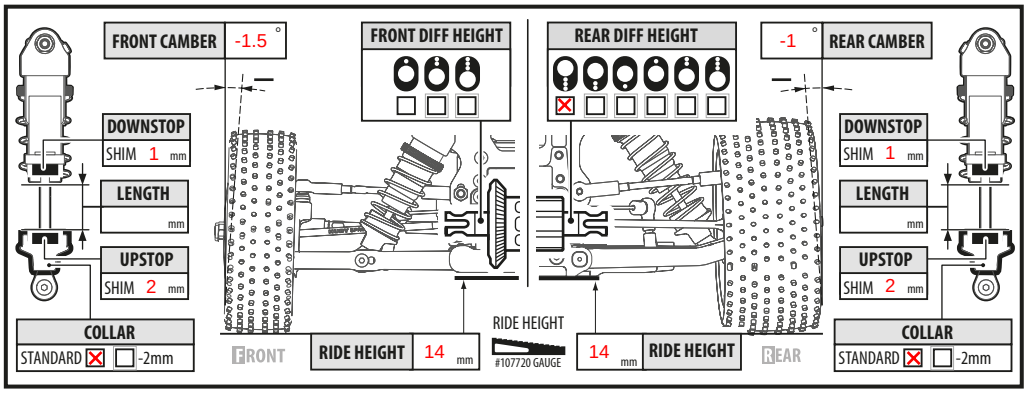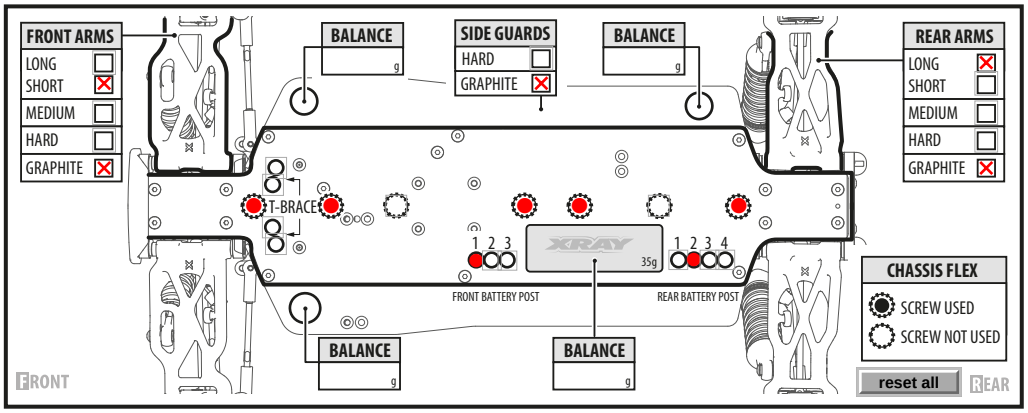
FRONT — APPLIED ◉ ☒ APPLIED — REAR