SET-UP SHEET

XRAY XB4'22

RACE	Club Race		
TRACK	Excel RC & Hobbies		
NAME	Jeff Hodges	DATE	

LAPS		BEST LAP TIME	sec
QUALIFYING POSITION		FINAL POSITION	

TRACK

SIZE	☐ OPEN	☐ MEDIUM	☒ TIGHT
TRACTION	☐ ☐ ☐ ☐ ☐ ☐ ☐ ☒ ☐		
	VERY-LOW	MEDIUM	VERY-HIGH
SURFACE	☒ SMOOTH	☐ MEDIUM	☐ BUMPY
TYPE	☐ CLAY	☒ CARPET	☐ ASTRO
CONDITION	☐ BLUE GROOVE	☐ HARD PACKED	☒ DRY
	☐ DUSTY	☐ LOAMY	☐ WET

DIFFERENTIAL TYPE

FRONT ↓	MIDDLE ↓	REAR ↓
GEAR DIFF ☒	GEAR DIFF ☒	GEAR DIFF ☒
BALL DIFF ☐	SLIPPER ☐	BALL DIFF ☐
ACTIVE DIFF ☐	ACTIVE DIFF ☐	ACTIVE DIFF ☐
60° 90° 120°	60° 90° 120°	60° 90° 120°
OIL 20K cSt	OIL 1M cSt	OIL 20K cSt

SATELLITE GEARS

COMPOSITE ☒	COMPOSITE ☒	COMPOSITE ☒
STEEL ☐	STEEL ☐	STEEL ☐
40T ☒ ☐ 41T	CROWN GEAR	40T ☒ ☐ 41T

CENTRAL SLIPPER & ONE-WAY SETTING

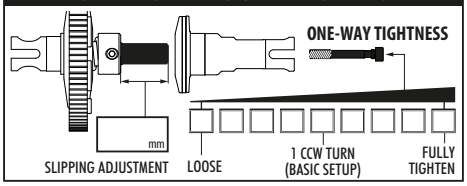

GEARING

PINION	21 T	81 T	CENTER DIFF SPUR

FRONT	SHOCKS	REAR
4 dot short	SPRINGS	4 dot short
cSt 750	OIL	550 cSt
% 0	REBOUND	0 %
	PISTONS	
☒ 2 HOLES	☐ ø1.2mm ☐	☒ 2 HOLES
☐ 3 HOLES	☐ ø1.3mm ☐	☐ 3 HOLES
☐ 6 HOLES	☐ ø1.4mm ☐	☐ 6 HOLES
	☒ ø1.6mm ☐	
	☐ ø1.7mm ☒	
	CUSTOM PISTONS	
HOLES	ø mm ø mm	HOLES

FRONT	ANTI ROLL BAR	REAR
1.8 mm	THICKNESS	1.8 mm

FRONT	TIRES	REAR
Proline Prism	BRAND	Proline Prism
CR3	COMPOUND	CR3
Open Cell	INSERTS	Open Cell
Kit	WHEELS	Kit

ELECTRONICS

MOTOR	R1 Wurks 13.5	Hobbywing	SPEEDO
MOTOR TIMING	42*	SMC 5100	BATTERY

BATTERY SIZE

STD. SHORT ☒ ☐ LOW SHORT

BODY

TYPE	Gamma	STANDARD ☒ ☐ LIGHT

COMMENTS

I run Carbon Side Guards
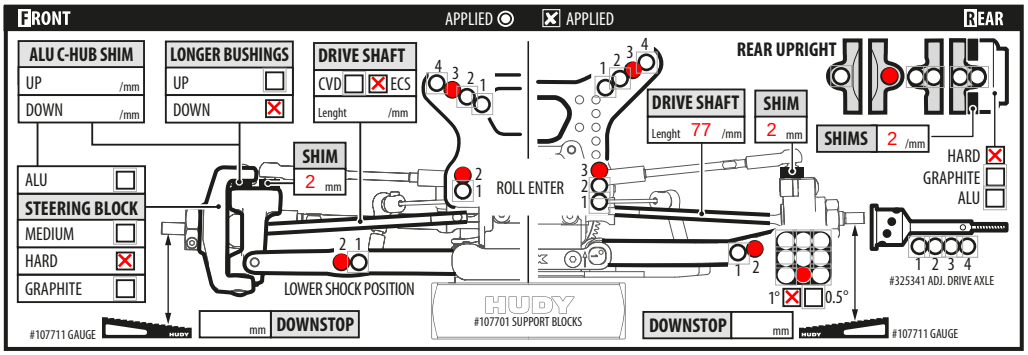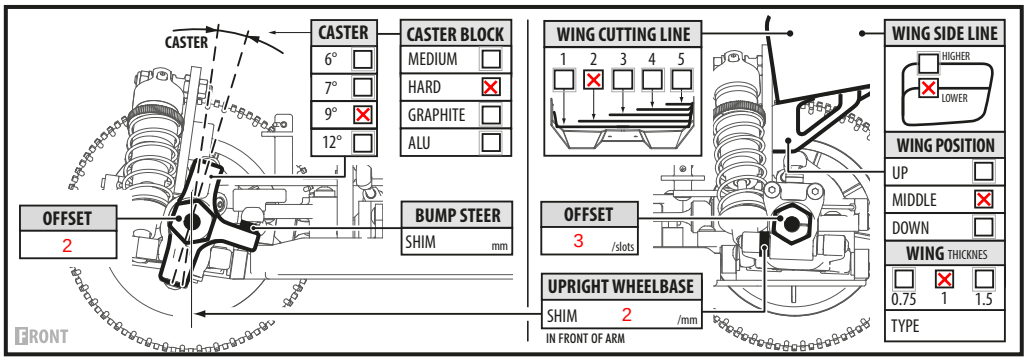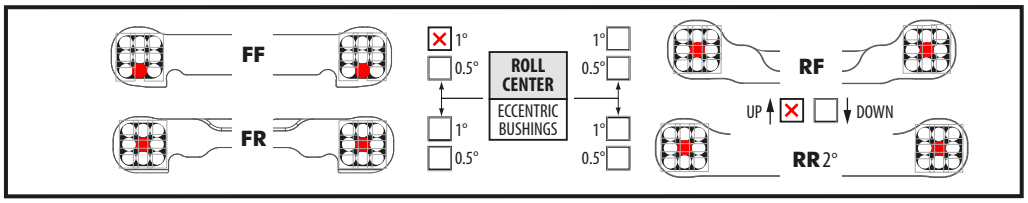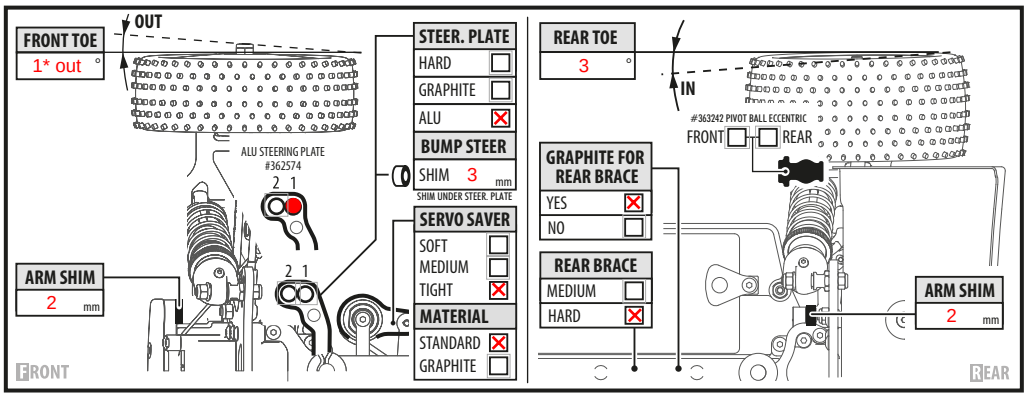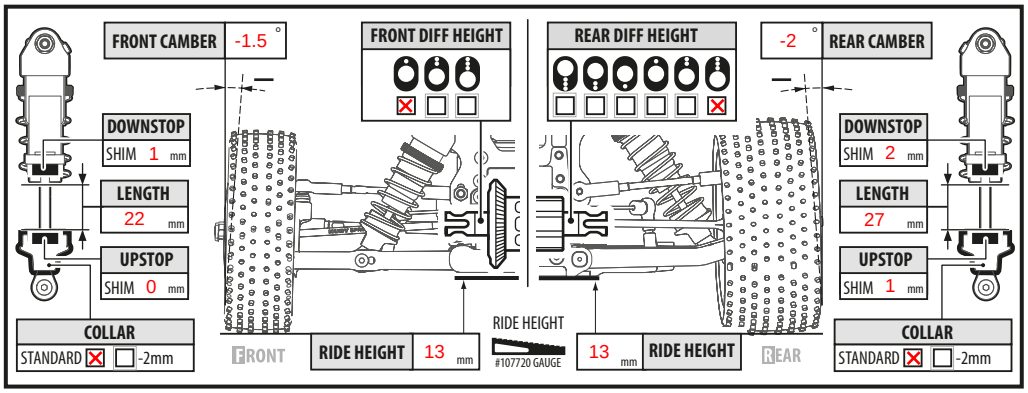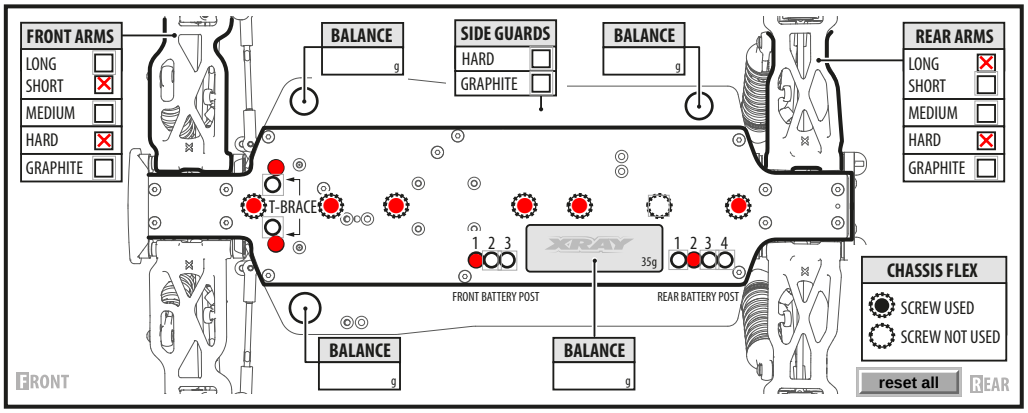
FRONT — APPLIED ◉ ☒ APPLIED — REAR