SET-UP SHEET

Race time / Lap: _____
Best lap: _____

S35-3E
1/8 Off Road Brushless Power Pro Buggy

Track Conditions

Size:	☐ Open	☑ Med.	☑ Tight
Traction:	☑ High	☑ Med.	☐ Low
Surface:	☑ Smooth	☑ Med.	☐ Bumpy

Name: Josh Pain
Date: 08/10/17
Track: MORBC

Diff. Oil
Front: # 7
Center: # 7
Rear: # 3

Electric System
ESC Type: _____
Motor Type: _____
Motor Gear/Spur Gear: _____
Battery Type
A: Standard Pack _____
B: Shorty Pack _____

Tire

Front		Rear	
Type:	AKA Enduro SLW	Type:	AKA Enduro SLW
Foam:	AKA Red	Foam:	AKA Red

Front Suspension

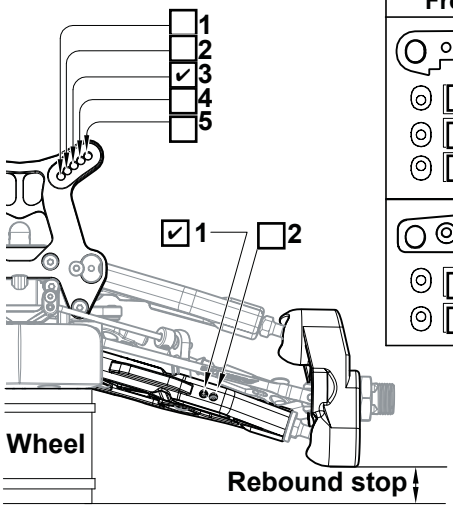

Front Toe-In

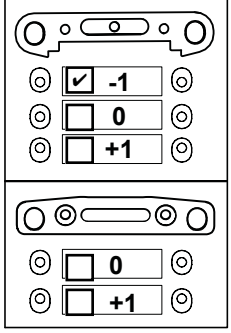

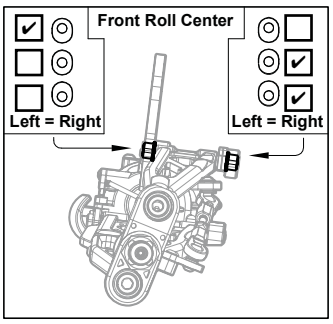

Track width STD mm
Camber angle Upper ____ mm
Lower ____ mm
Toe angle 2 outl
Rebound stop ____ mm
Sway bar ☑ Use 2.4 mm
☐ None

Front Shocks
Oil: 37.5 tlr
Pistons: 1.3 x 6
Spring: Yellow
Spacer: ____ mm

Camber Angle
L: 1.5 °
R: 1.5 °

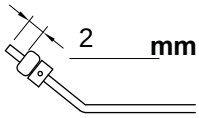

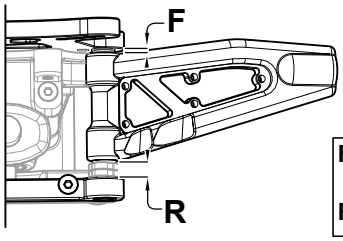

F: 2 mm
R: 2 mm

Steening Ackerman

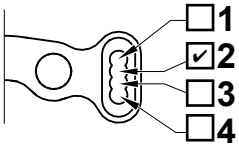

Notes:
FR/ B plate, -1 (offset pill down)

Body: Sworkz
Wing: Sworkz

RearSuspension

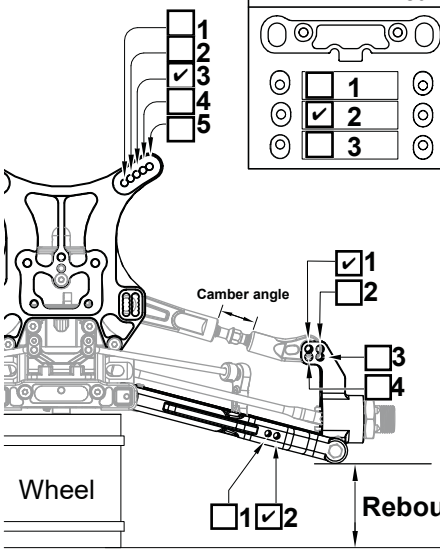

Rear Toe-In

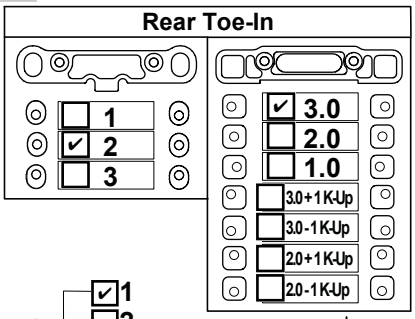

Upper arm position

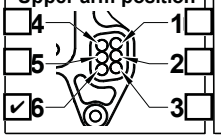

Camber angle ____ mm
Rebound stop ____ mm

RearShocks
Oil: 32.5 tlr
Pistons: 1.4 x 6
Spring: Red
Spacer: ____ mm

Wing Position

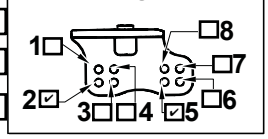

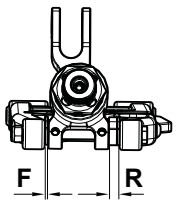

Front

Wheelbase adjustment F 2 mm
R 3 mm

Sway bar ☑ Use 2.6 mm
☐ None

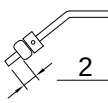

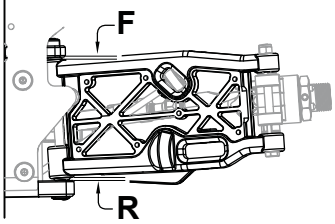

Notes: