S12-2 Setup Sheet

1/10 Off Road 2WD Racing Electric Buggy

Name: Lee Chorley **Date:** 5/7/20

City/Track: Ulverston

Event: Practice Day

Conditions: ☐Indoor ☑Outdoor ☑Dry ☑Wet ☐Blue Groove ☐Hard Packed

Composition: ☑Astroturf ☐Clay ☐Carpet ☐Dirt ☐Grass ☐Other: Track greasy in morning

Size: ☐Open ☐Medium ☐Tight **Traction:** ☐High ☑Medium ☐Low **Surface:** ☐Smooth ☑Medium ☐Bumpy

Differential

☑Ball: ☐Gear - Oil:

Tire & Inserts

	Front	Rear
Tire:	Silver Cut Stagger	Silver Dart
Insert:	None	Med
Notes:		

Electronics

Motor: Reedy 8.5t Spur/Pinion: 26/81

Battery: Performa Racing 3600 LCOG

Battery Position: Middle

ESC: Hobbywing

ESC Settings:

Servo: Xpert Receiver: Futaba

Front Suspension

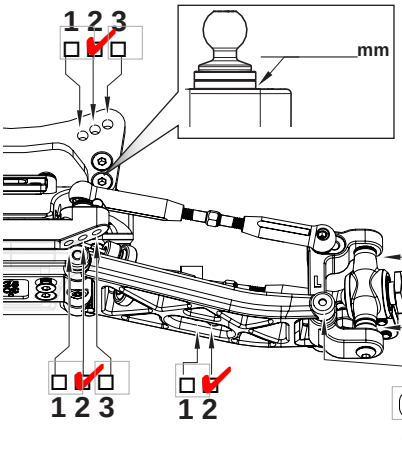

Camber: -1

Toe: 0

Ride Height: 17

Sway Bar: none

Arm: ☐ Carbon Composite Hard ☑ Standard

Upper 0.5 mm

Lower 4 mm

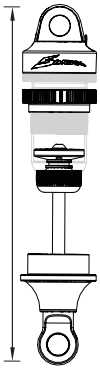

Oil: 500

Piston: 1.6

Spring: 3 Dot

Preload: None

Limiter - In: 0 **Out:** 0

Length:

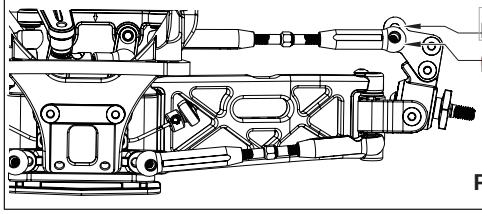

☐1 Bumpsteer

☑2

Front Wing: Yes

Bulkhead Adjustment

☐ 0.5mm ☐ 1mm

Bulkhead

☑25° ☐ 30°

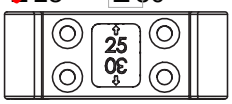

☑Standard

☑25g Brass

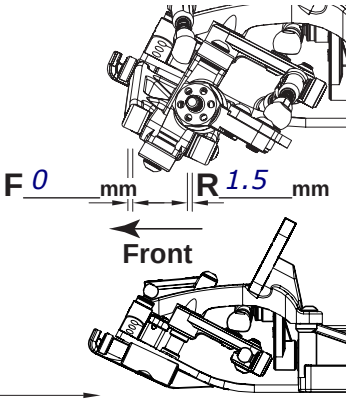

Rear Suspension

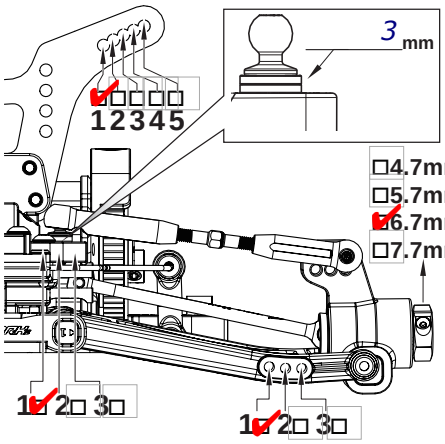

Rear Wing: Kit

Body: Kit

☐4.7mm

☐5.7mm

☑6.7mm

☐7.7mm

Front Insert

Rear Insert

Wing Angle ☐0 ☐-3 ☐3

Wing Position

☐H

☐L

☐H

☐L

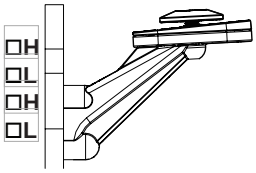

Camber: -1

Ride Height: 17

Sway Bar: None

Arm: ☐ Carbon Composite Hard ☑ Standard

Side Guard: ☐ Carb Comp Hard ☑ Standard

Rear Toe-In

F: ☐0.5 ☑1.0

R: ☐0.5 ☑1.0

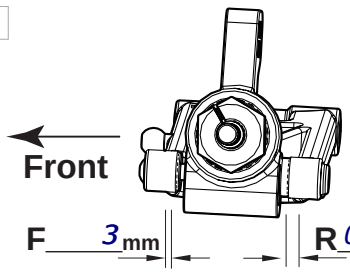

Oil: 350

Piston: 1.7

Spring: No Dot

Preload: None

Limiter - In: 0 **Out:** 0

Length:

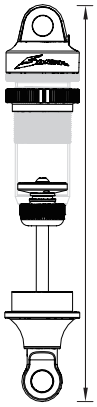

Notes

Side screws removed bar front 3 and rear 1, 160g under lipo, 10g under layshaft behind motor, Titainium screwkit

Arn0 - PetitRC