S12-2 Setup Sheet

1/10 Off Road 2WD Racing Electric Buggy

Name: Lee Chorley **Date:** 5/4/21

City/Track: Bury Metro

Event: Boris easter bash

Conditions: ☐Indoor ☑Outdoor ☑Dry ☐Wet ☐Blue Groove ☐Hard Packed

Composition: ☑Astroturf ☐Clay ☐Carpet ☐Dirt ☐Grass ☐Other:

Size: ☑Open ☑Medium ☐Tight **Traction:** ☑High ☑Medium ☐Low **Surface:** ☐Smooth ☑Medium ☑Bumpy

Differential

☑Ball: ☐Gear - Oil:

Tire & Inserts

	Front	Rear
Tire:	Schu, Cut Stagger	Schu, Dart
Insert:	None	Med
Notes:	Yellow	Yellow

Electronics

Motor: Reedy 8.5t Spur/Pinion: Kit, 26t

Battery: Performa LCG 4000

Battery Position: 10mm away from waterfall

ESC: Hobby wing XR10 pro

ESC Settings:

Servo: Xpert pi-3402 shorty Receiver: Futaba

Front Suspension

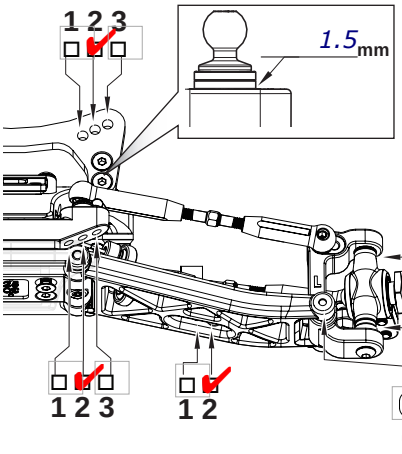

Camber: -1

Toe: 0

Ride Height: 17mm

Sway Bar: none

Arm: ☐ Carbon Composite Hard ☑ Standard

Upper 0 mm

Lower 1.5 mm

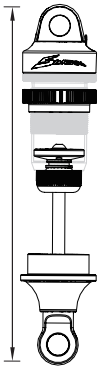

Oil: 500

Piston: Flat 1.6

Spring: AE Blue V2

Preload: None

Limiter - In: **Out:**

Length:

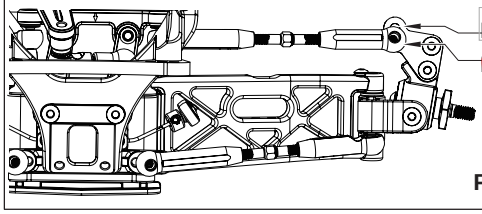

☐1 **Bumpsteer**

☑2

Front Wing: Yes

Bulkhead Adjustment

☐ 0.5mm ☐ 1mm

Bulkhead

☑25° ☐ 30°

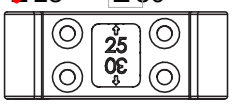

☑ Standard

☑ 25g Brass

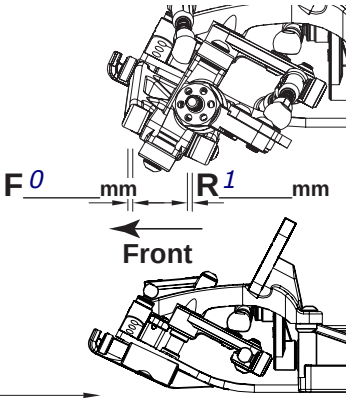

F 0 mm R 1 mm

Front

Rear Suspension

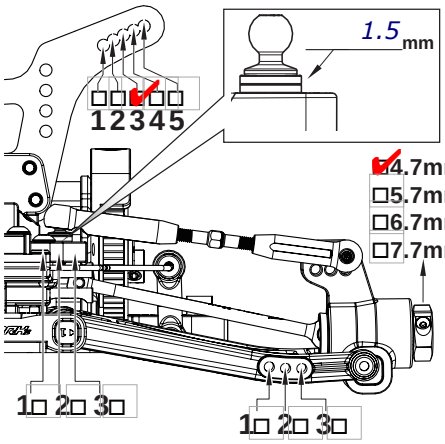

Rear Wing: Kit

Body: Kit

☑4.7mm
☐5.7mm
☐6.7mm
☐7.7mm

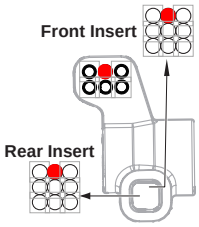

Wing Angle ☑0 ☐-3 ☐3

Wing Position

☐H
☑L
☐H
☑L

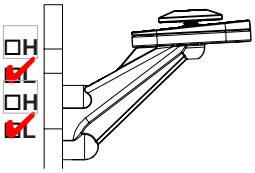

Camber: -2

Ride Height: 17mm

Sway Bar: None

Arm: ☐ Carbon Composite Hard ☑ Standard

Side Guard: ☐ Carb Comp Hard ☑ Standard

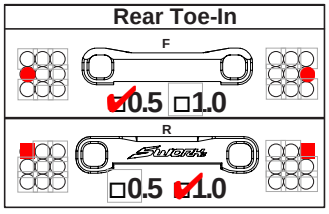

Front

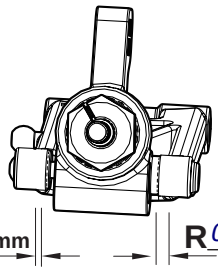

F 3 mm R 0 0 mm

Oil: 350

Piston: Flat 1.7

Spring: AE Gray V2

Preload: None

Limiter - In: **Out:**

Length:

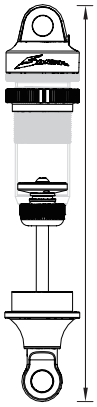

Notes

130g under lipo, LCRC weight under layshaft behind motor, AE Ball diff

Arn0 - PetitRC