S12-2 Setup Sheet

1/10 Off Road 2WD Racing Electric Buggy

Name: Boda Clément **Date:** 08/10/22

City/Track: Fenouillet

Event: French cup

Conditions: ☑Indoor ☐Outdoor ☑Dry ☐Wet ☐Blue Groove ☐Hard Packed

Composition: ☐Astroturf ☐Clay ☑Carpet ☐Dirt ☐Grass ☐Other: EOS Carpet

Size: ☐Open ☑Medium ☐Tight **Traction:** ☑High ☐Medium ☐Low **Surface:** ☑Smooth ☐Medium ☐Bumpy

Differential

☐Ball: ☑Gear - Oil: 10 K 2 Gear

Tire & Inserts

	Front	Rear
Tire:	Cut Stagger Low profil	Cactus
Insert:	None	Med

Notes: 1 ext Row cut for rear tires

Electronics

Motor: X22 7.0 Spur/Pinion: 24 / 78

Battery: LRP ULCG 4000 mAh

Battery Position: 23 mm Front Waterfall

ESC: LRP Flow X V3.2

ESC Settings: 7-10-5-3-0-0-0-1

Servo: Savox 1258 Receiver: RX 482

Front Suspension

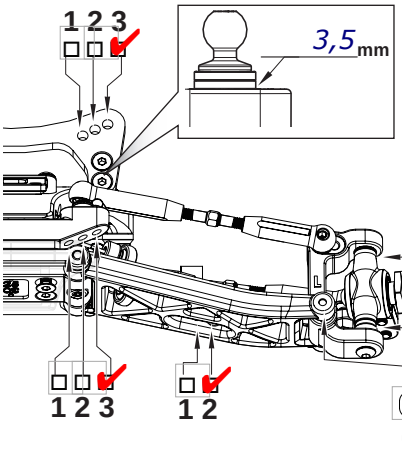

Camber: -2

Toe: 0

Ride Height: 14mm

Sway Bar: None

Arm: ☑Carbon Composite Hard ☐ Standard

Upper 3,5 mm

Lower 0 mm

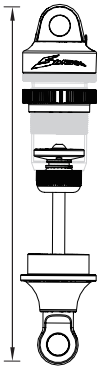

Oil: 500 SCT Donuts racing

Piston: 2 x 1,6 2mm

Spring: Yellow V2

Preload:

Limiter - In: 2 **Out:** 1 O'Ring

Length:

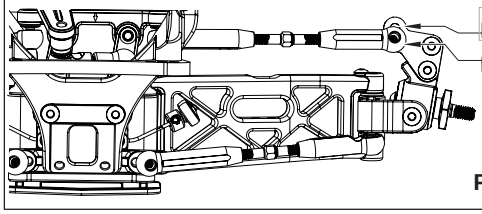

☐1 Bumpsteer

☑2 0 mm

Bulkhead Adjustment

☐ 0.5mm ☐ 1mm

Bulkhead

☑25° ☐ 30°

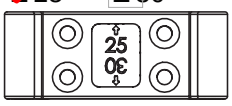

☑Standard

☑25g Brass

Front Wing: Yes (Kit)

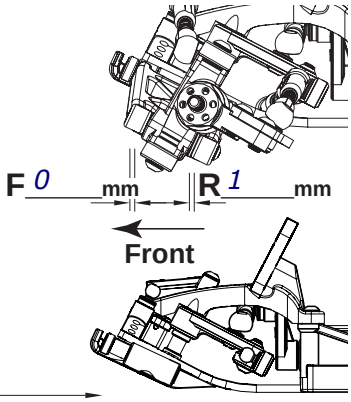

Rear Suspension

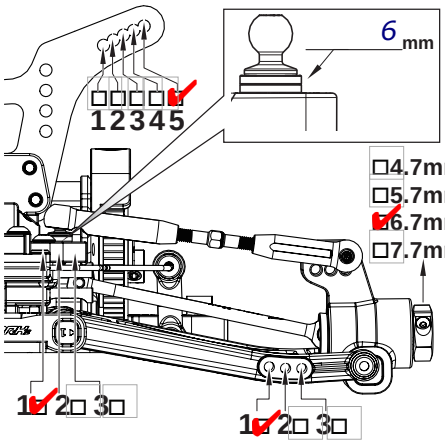

Rear Wing: Kit

Body: F2Jconcepts

☐4.7mm
☐5.7mm
☑6.7mm
☐7.7mm

Wing Angle ☑0 ☐-3 ☐3

Wing Position

☐H
☑L
☐H
☑L

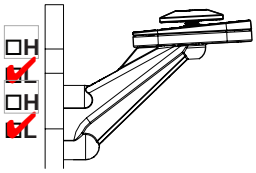

Camber: -3°

Ride Height: 15 mm

Sway Bar: 1,4 mm

Arm: ☑Carbon Composite Hard ☐ Standard

Side Guard: ☑Carb Comp Hard ☐ Standard

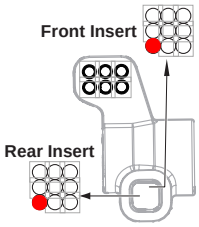

Rear Toe-In

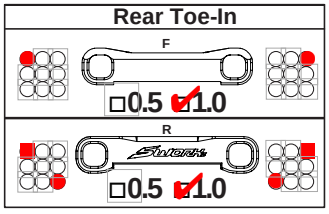

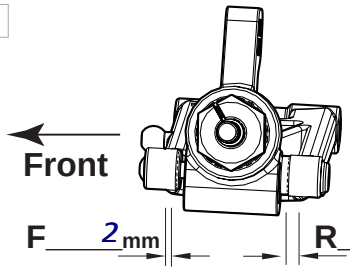

Oil: 500 CST Donuts racing

Piston: 2 x1,7

Spring: Blue V2

Preload:

Limiter - In: 2 **Out:** 1 o'ring

Length:

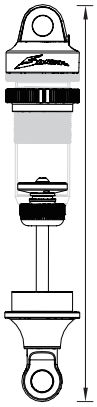

Full alloy options, JC Finturnbuckles, 43 grs under lipo, 35 g under ESC, 18 grs under servo, short wheelbase close to gear box. Alu Hub full Length, Differentiel position +3 / Lipo charge HV.

Options: SW332009 / SW332029 / SW332044 / SW332045 / SW332046 / SW332048 / SW33204041 / SWC3236 Front shock tower

Arn0 - PetitRC