S12-2 Setup Sheet

1/10 Off Road 2WD Racing Electric Buggy

Name: BODA CLEMENT **Date:** 14/05/2k22

City/Track: BONNEVILLE

Event: CF 3

Conditions: ☐Indoor ☑Outdoor ☑Dry ☐Wet ☐Blue Groove ☐Hard Packed

Composition: ☑Astroturf ☐Clay ☐Carpet ☐Dirt ☐Grass ☐Other:

Size: ☑Open ☑Medium ☐Tight **Traction:** ☑High ☑Medium ☐Low **Surface:** ☐Smooth ☐Medium ☐Bumpy

Differential

☐Ball: ☑Gear - Oil: 3000: 2 GEARS

Tire & Inserts

	Front	Rear
Tire:	STAG BALLONS	DART
Insert:		MED
Notes:		

Electronics

Motor: MACLAN 6.5 Spur/Pinion: 21/78

Battery: TPro 4400 shorty LCG 43G under

Battery Position: 90% front

ESC: M32T PRO

ESC Settings:

Servo: savox 1258TG CE Receiver: RX 482

Front Suspension

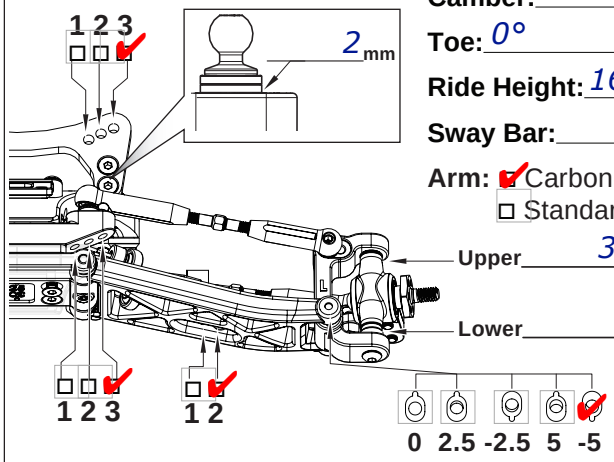

Camber: -2°

Toe: 0°

Ride Height: 16mm

Sway Bar: NO

Arm: ☑Carbon Composite Hard ☐ Standard

Upper 3.5 mm

Lower 0 mm

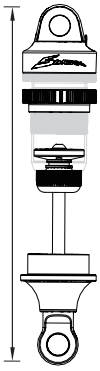

Oil: 475 CST Sworkz

Piston: 2X1.6

Spring: V2 YELLOW

Preload:

Limiter - In: 2 **Out:** 0

Length: 20mm

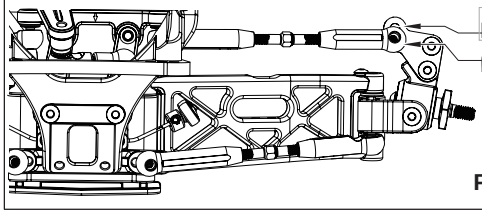

☐1 Bumpsteer

☑2 0mm

Front Wing: yes

Bulkhead Adjustment

☐ 0.5mm ☐ 1mm

Bulkhead

☑25° ☐ 30°

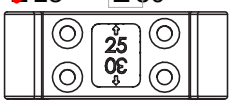

☑Standard

☑25g Brass

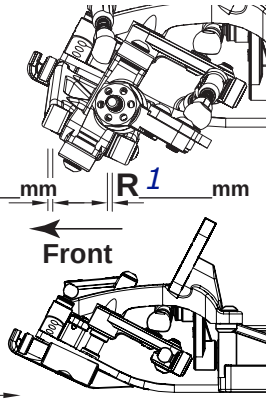

F mm R 1 mm

Front

Rear Suspension

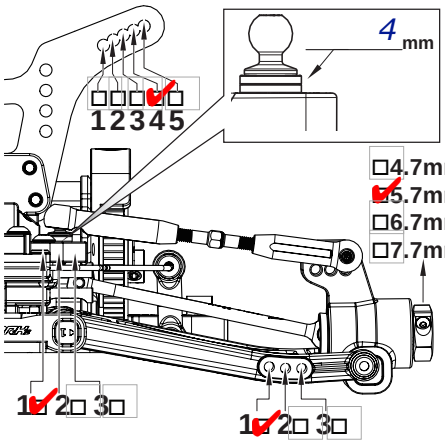

Rear Wing: KIT

Body: JC F2

☐4.7mm

☑5.7mm

☐6.7mm

☐7.7mm

Front Insert

Rear Insert

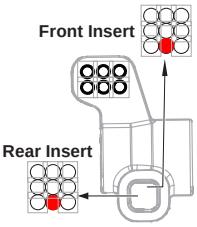

Wing Angle ☑0 ☐-3 ☐3

Wing Position

☐H

☑L

☐H

☐L

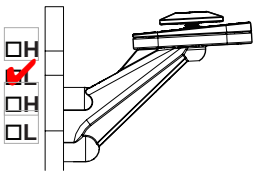

Camber: -2°

Ride Height: 17mm

Sway Bar: no

Arm: ☑Carbon Composite Hard ☐ Standard

Side Guard: ☑Carb Comp Hard ☐ Standard

Rear Toe-In

F: ☑0.5 ☐1.0

R: ☑0.5 ☐1.0

Front

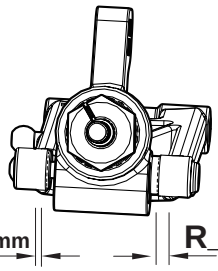

F mm R 3 mm

Oil: 400CST DONUTS

Piston: 2X1.7

Spring: V2 GRAY

Preload:

Limiter - In: 2 **Out:**

Length:

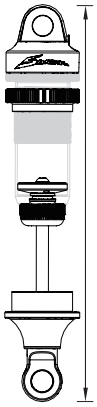

cavalieri carpet front shocks tower hole 4

ALUMINUM REAR HUB SHORT position +3mm link

CARBON S14-3 slipper pads///// JCONCEPTS FIN TURNBUCKLES

Arn0 - PetitRC