COUGAR SV
Takes 2wd to the next level

Driver and Event

Name	Steve S
Date	12-4-10
Event	rchr club race
Weather	indoor
Result	

Track Conditions

Surface	dirt-clay
Grip Level	med to high
Track Condition	smooth
	smooth
	smooth

Driver Notes

associated inline steering, long 3.5 front springs, saddle pack conversion, .030 limiter inside rear shock, large wing, standard top deck as battery hold down, .03 bumpsteer spacer

Electrics and Gearing

E.S.C	speed passion
Servo	orion
Reciever	spectrum
Batteries	5200 50c
Motor	sp 10.5
Spur	83
Pinion	25

Ext Gears: 34/22 ☐ 33/23 ☒ 32/24 ☐

Wheels and Tyres

Rear Wheels	flipout
Rear Tyre	flipout
Rear Insert	
Front Wheels	jc rounder
Front Tyre	
Front Insert	

Differential Height

High ☐ Low ☒

Topdeck

Stiff ☐ Medium ☐ Soft ☒

Rear Shocks

Oil 30 | Spring 2.0 | Ball Socket: Short ☐ Long ☒

Piston Holes: 2 ☐ 3 ☐ 4 ☐ 5 ☐ 6 ☒

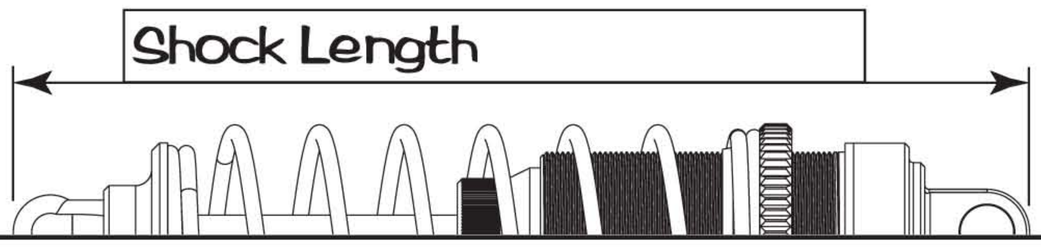

Front Shocks

Oil 30 | Spring 3.5

Piston Holes: 2 ☐ 3 ☐ 4 ☒ 5 ☐ 6 ☐

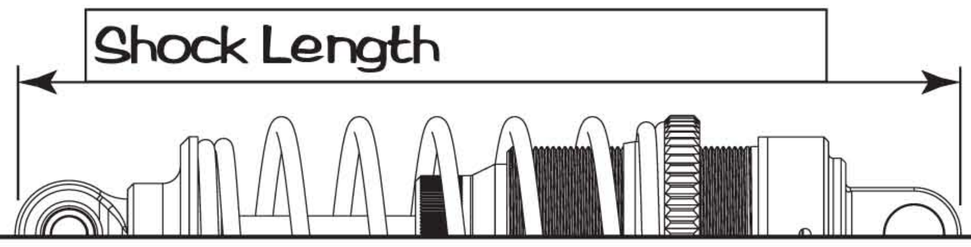

Rear Suspension

Anti roll bar: No ☒ 1.20 ☐ 1.40 ☐ 1.60 ☐

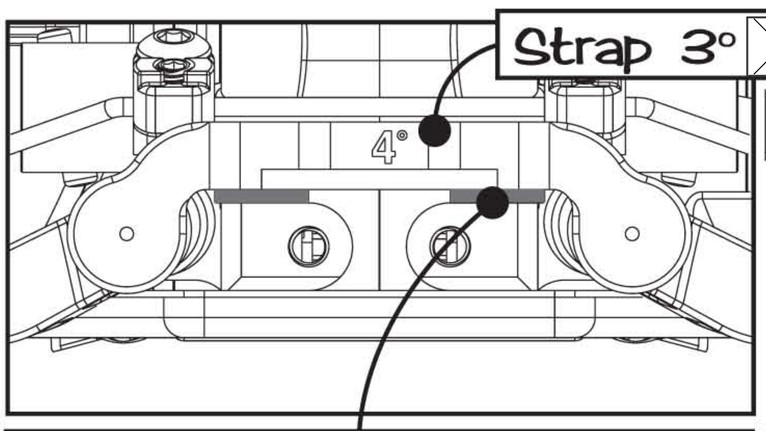

Strap 3° ☒ 4° ☐ 5° ☐

Link Washers 0 mm

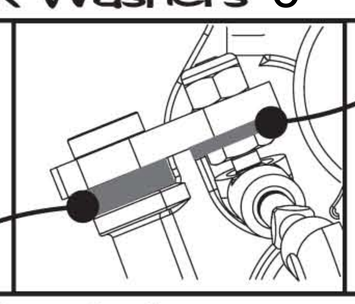

Äntisquat Washers 1 mm

Link Washers 4 mm

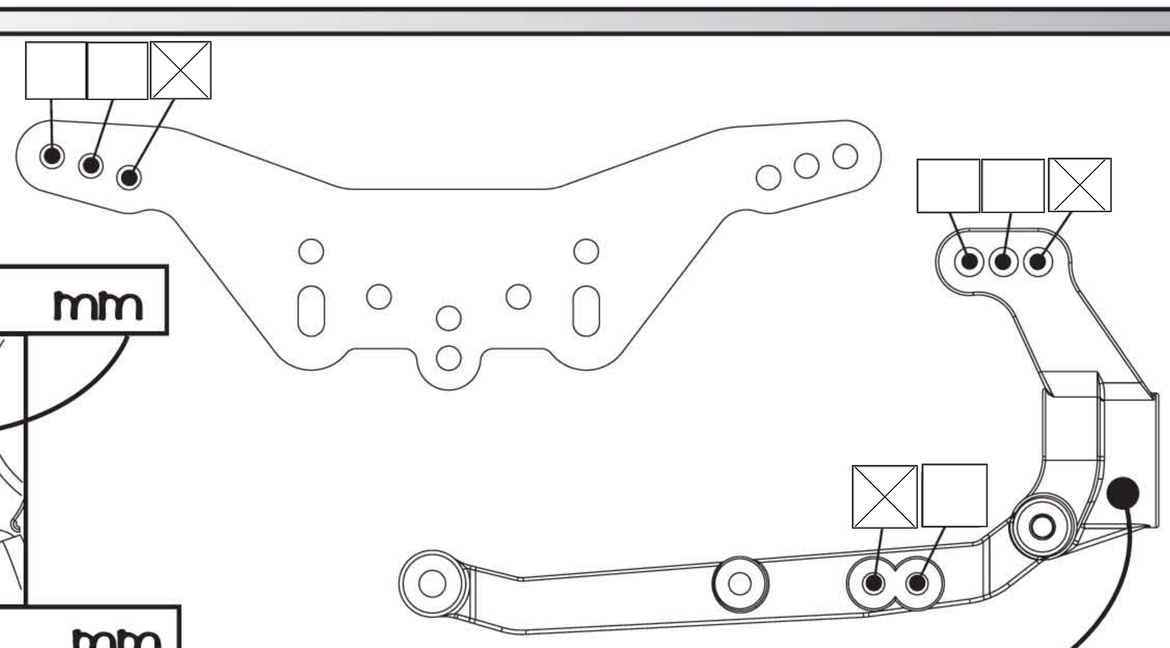

Rear Hub Carrier: Alloy ☒ Std ☐

Alloy Hub Carrier: +1° ☒ -1° ☐

Shock Postion	Front ☒ Rear ☐
Wheelbase	Short ☐ Med ☒ Long ☐
Rear Camber at Ride Height	-1

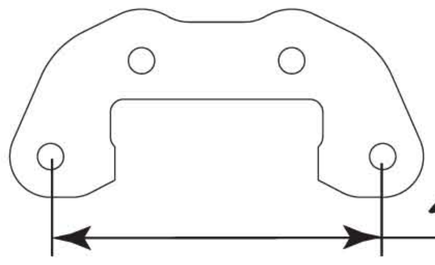

49 ☐ 44 ☐ 39 ☒ 34 ☐

Front Suspension

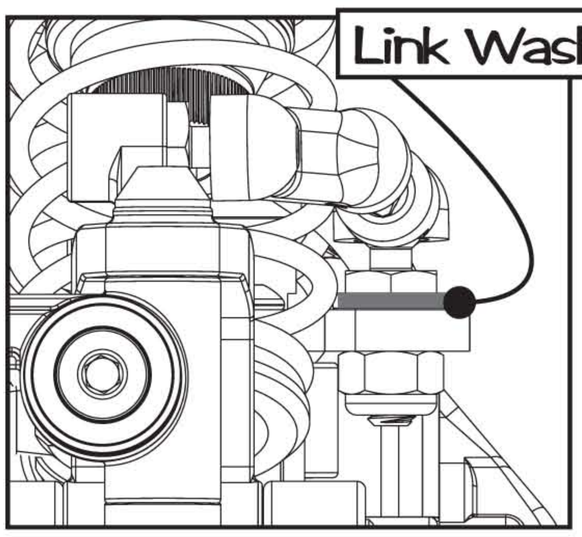

Link Washers 1 mm

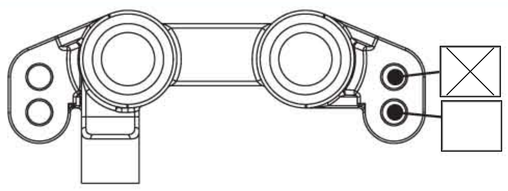

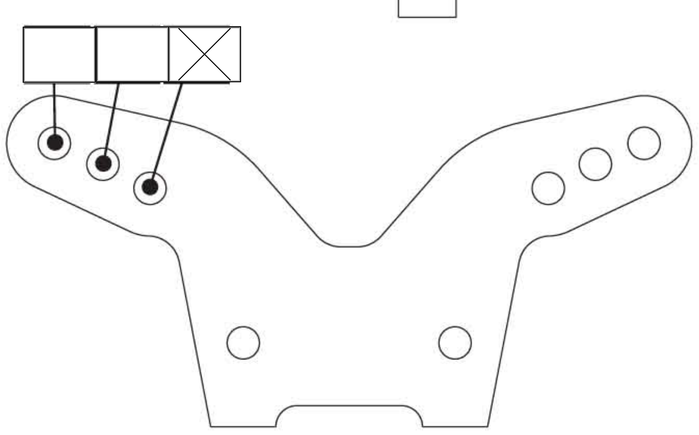

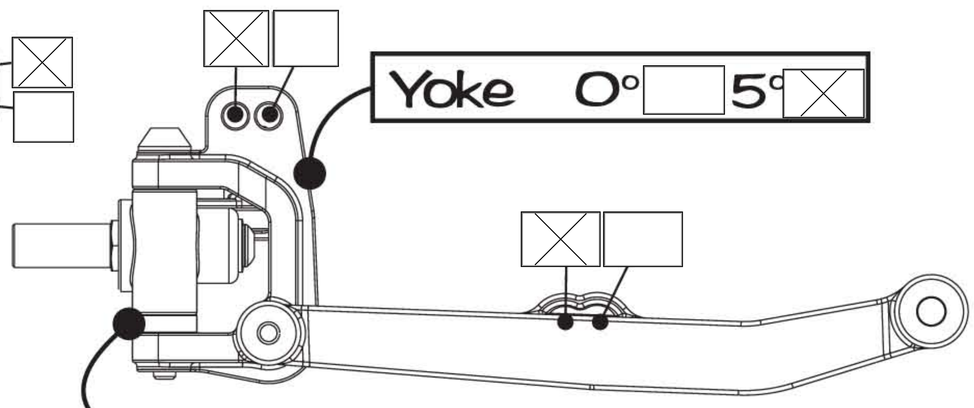

Yoke 0° ☐ 5° ☒

Hub Carrier: High ☒ Low ☐

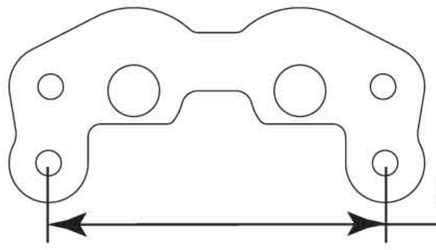

50.5 ☐ 45.5 ☐ 40.5 ☒

Front Camber at Ride Height	-1
Front Toe In	0

Editable fields by Pavel Balint (lochness42.eu)