PRSC201 R

PR RACING TYPE R

PR SC201 (Type R) Off Road 10th
2WD Short Course Truck Kit

ITEM NO:69000030

TRACK DESCRIPTION

LAYOUT	☐ Open	☐ Mixed	☐ Tight
TRACTION	☐ Low	☐ Medium	☐ High
SURFACE	☐ Bumpy	☐ Smooth	
COMPOSITION	☐ Astroturf ☐ Dirt	☐ Carpet ☐ Grass ☐	☐ Clay
CONDITION	☐ Blue Groove ☐ Dusty	☐ Hard Packed ☐ Dry ☐ Wet	☐ Loamy

EVENT		NAME	
TRACK		DATE	
TEMPERATURE	C F	BEST LAP TIME	

FRONT

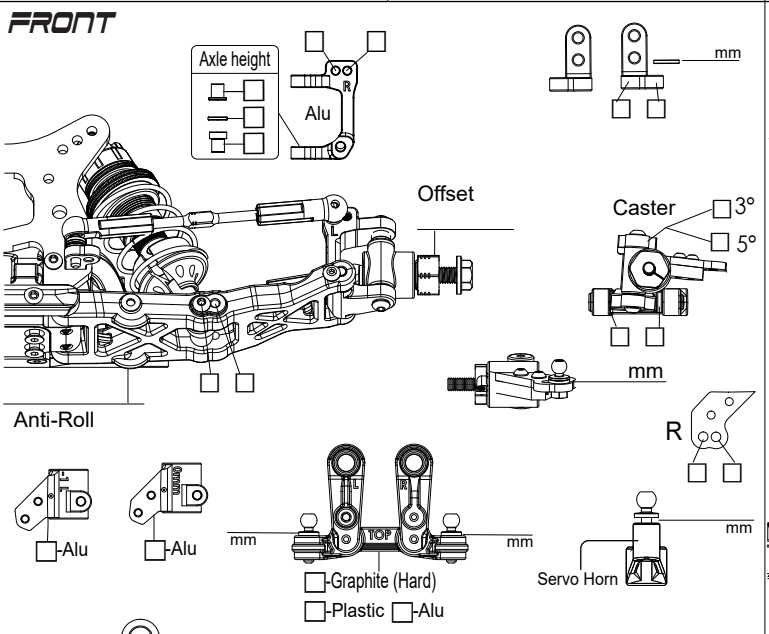

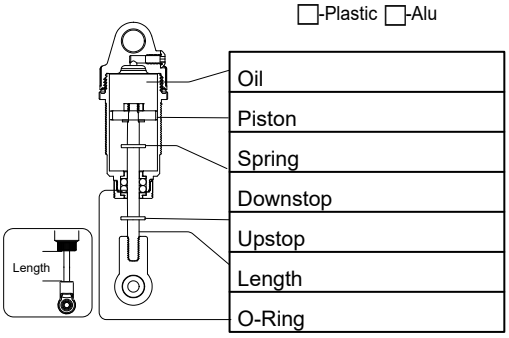

Oil
Piston
Spring
Downstop
Upstop
Length
O-Ring

Camber
Ride Height
Toe

REAR

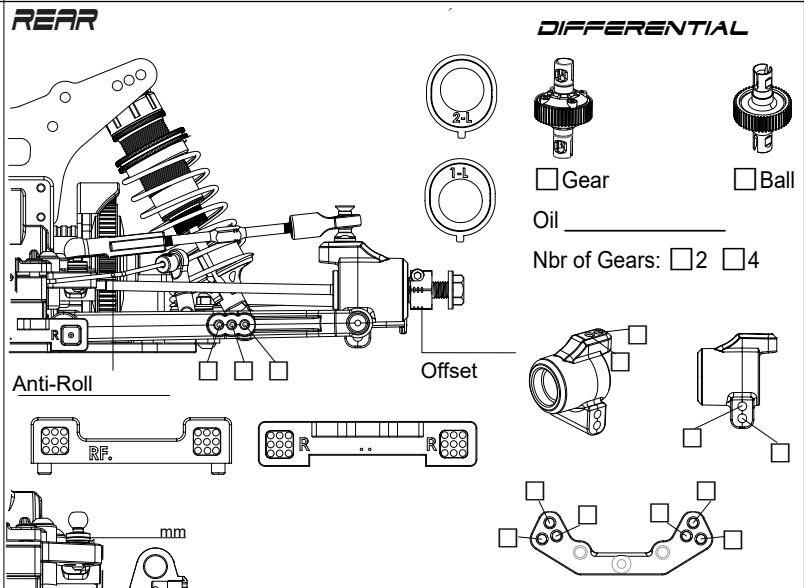

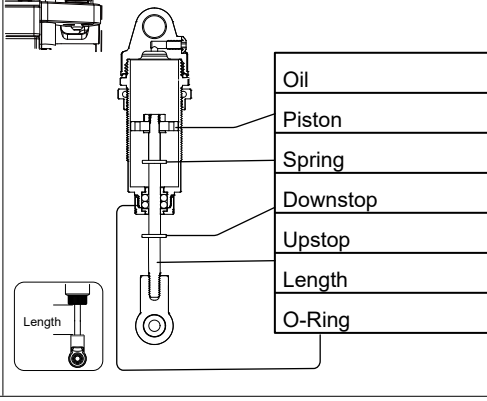

Oil
Piston
Spring
Downstop
Upstop
Length
O-Ring

Camber
Ride Height
Toe

Motor	
Spur Gear	T
Pinion	T
ESC	
Servo	☐ Std. Profile ☐ Low Profile
Battery	☐ Std. Short ☐ Low Short

FRONT	RADIO SETTING
Tire	ST-DR
Inserts	ST-EXP
Wheels	ST-Speed
REAR	
Tire	TH-DR
Inserts	TH-EXP
Wheels	TH-Speed

BODY

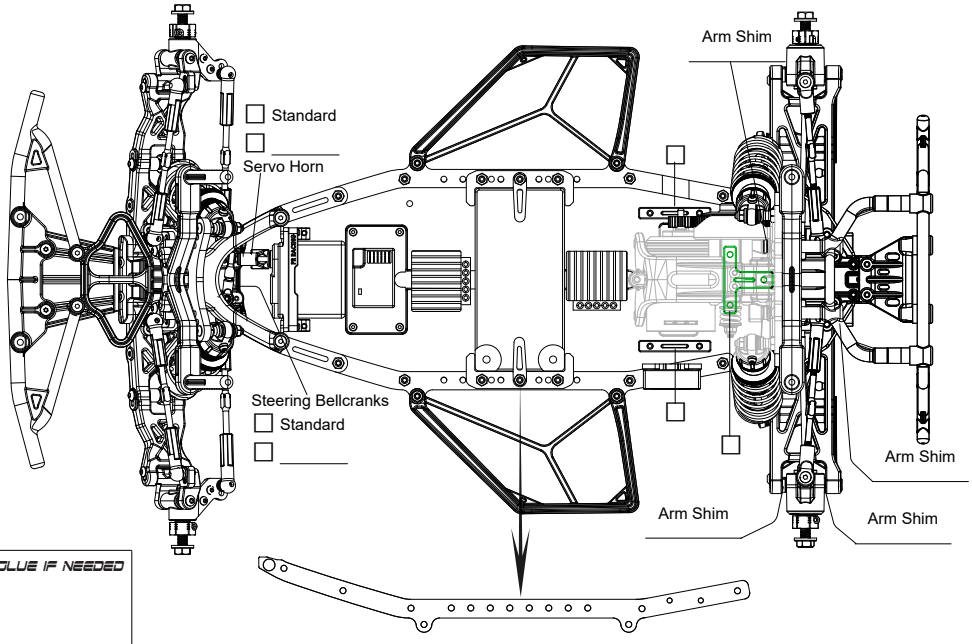

APPLY CA GLUE IF NEEDED