PRS3401 PR RACING TYPE R

2026 PR SB401-R 1/10 ELECTRIC 4WD OFF ROAD BUGGY KIT

SETUP SHEET

Race		Name	
Track		Date	
Temperature	C/F	Best Lap Time	sec

TRACK CONDITIONS

Layout	☐Fast	☐Mixed	☐Technical		
Traction	☐V-Low ☐	☐	☐	☐	☐ V-High☐
Surface	☐Smooth	☐Smooth-Bumpy	☐Bumpy		
Composition	☐Astroturf	☐Carpet	☐Dirt	☐Grass	☐
Condition	☐Blue Groove	☐Hard Packed	☐Loamy		
	☐Dusty	☐Dry	☐Wet		

FRONT

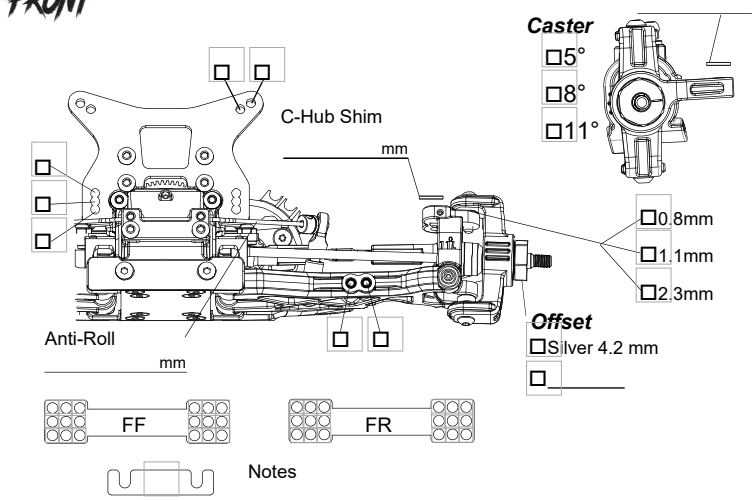

REAR

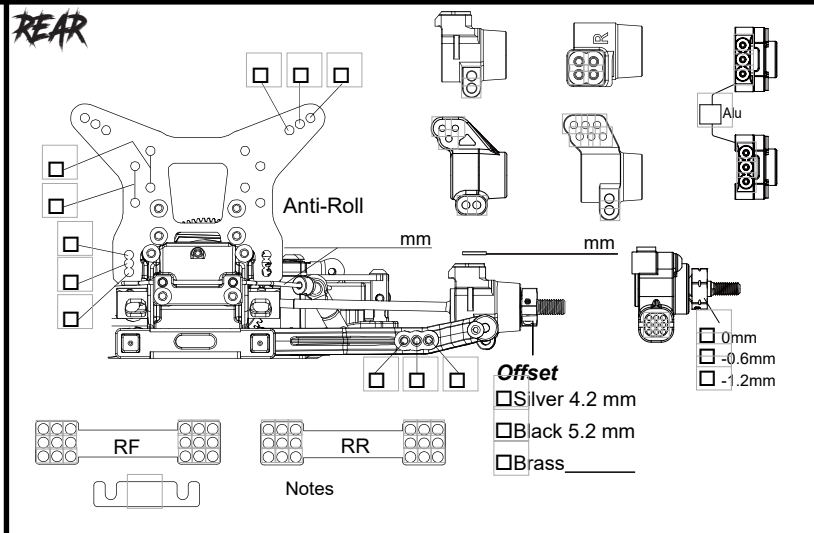

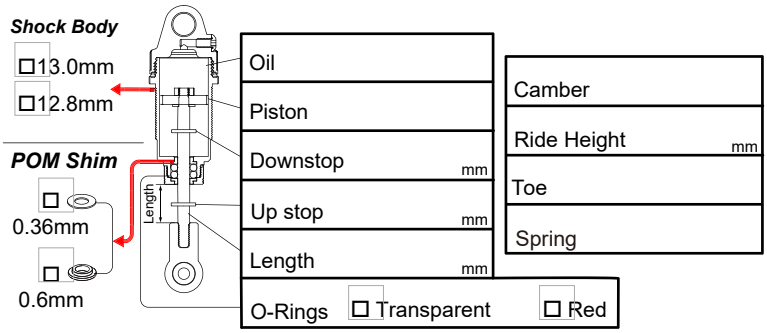

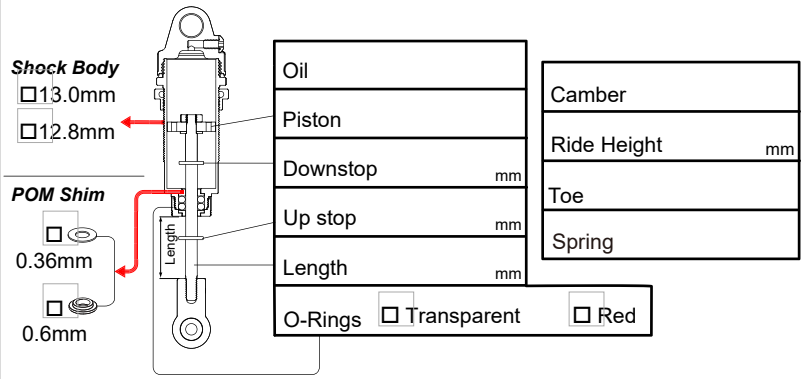

Motor	
Spur	T
Pinion	T
ESC	
Servo	☐ Std. Profile ☐ Low Profile
Battery	☐ Std. Short ☐ Low Short

Front	Radio System
Tire	ST-DR
Inserts	ST-EXP
Wheels	ST-Speed
Rear	TH-DR
Tire	TH-EXP
Inserts	TH-Speed
Wheels	

Body ☐ Standard ☐ Light

Wishbone hardness

Medium	High (Graphite)
☐ Front ☐ Rear	☐ Front ☐ Rear

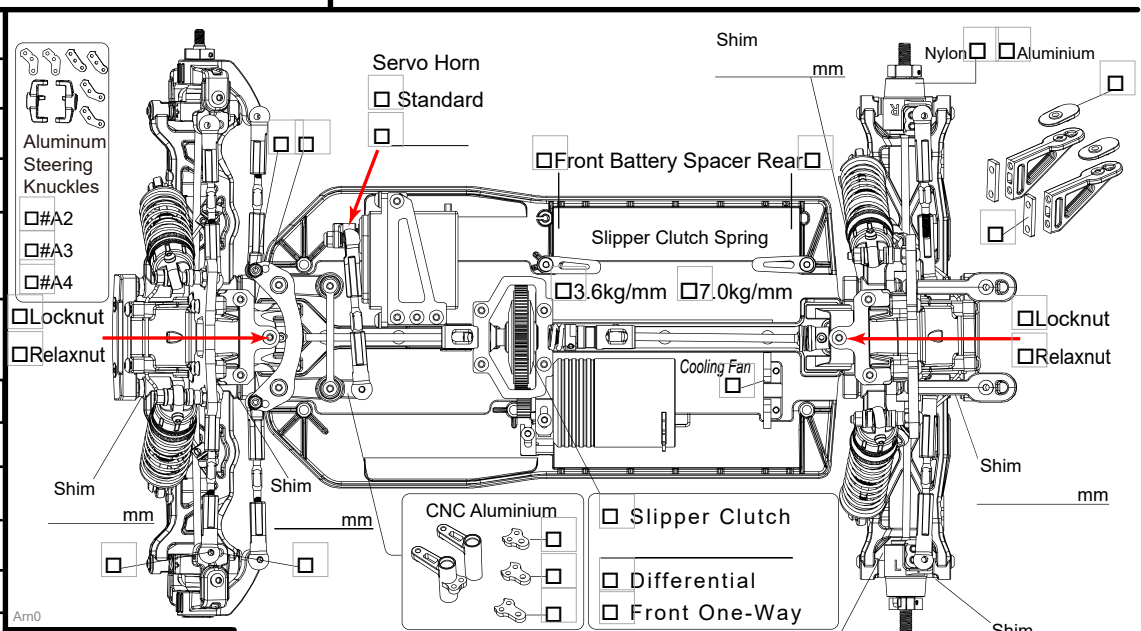

TYRES NOTES

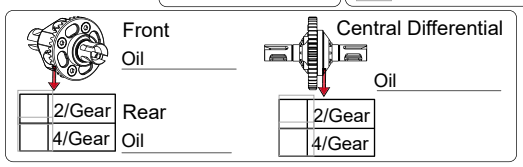

CHASSIS FLEX

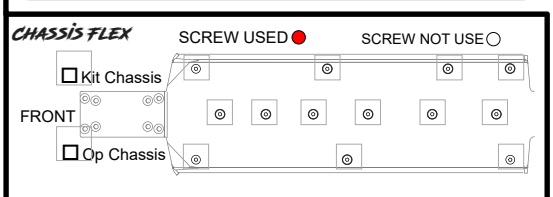
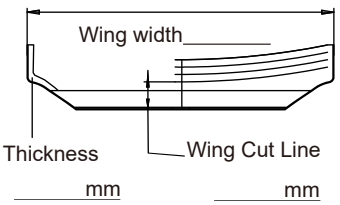
Wing