PRS3401 PR RACING TYPE R

2022 PR SB401-R 1/10 ELECTRIC 4WD OFF ROAD BUGGY KIT

SETUP SHEET

Race		Name	
Track		Date	
Temperature	C/F	Best Lap Time	sec

TRACK CONDITIONS

Layout	☑ Fast		☑ Mixed		☑ Technical	
Traction	☑ V-Low	☑	☑	☑	☑	☑ V-High ☑
Surface	☑ Smooth		☑ Smooth-Bumpy		☑ Bumpy	
Composition	☑ Astroturf	☑ Carpet	☑ Dirt	☑ Grass	☑	
Condition	☑ Blue Groove		☑ Hard Packed		☑ Loamy	
	☑ Dusty		☑ Dry		☑ Wet	

FRONT

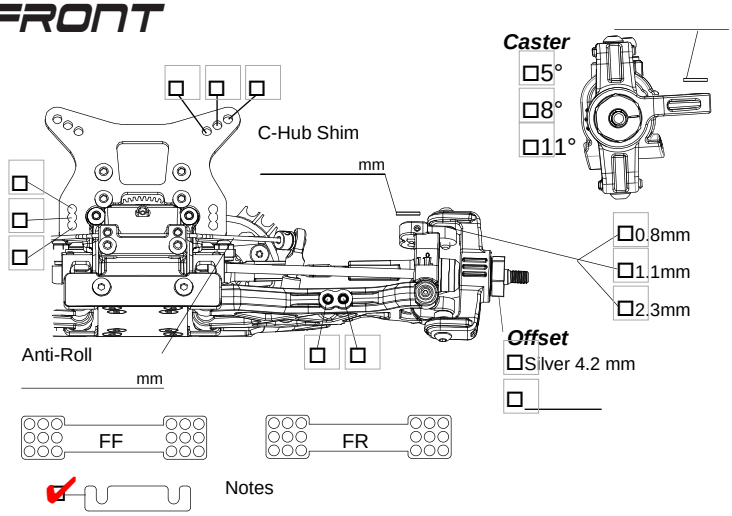

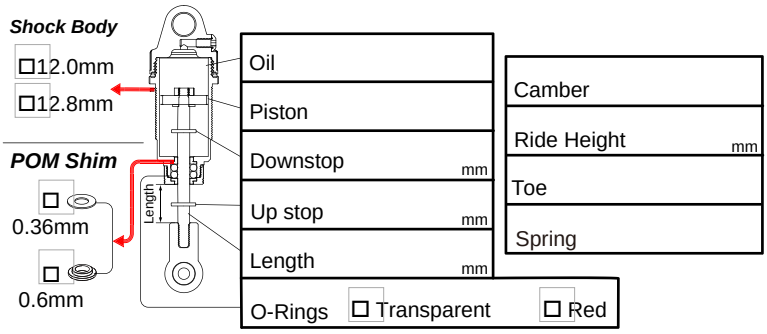

REAR

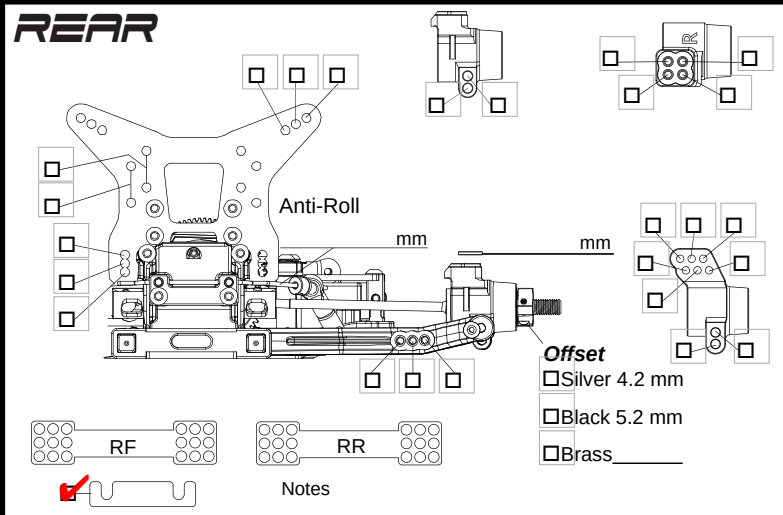

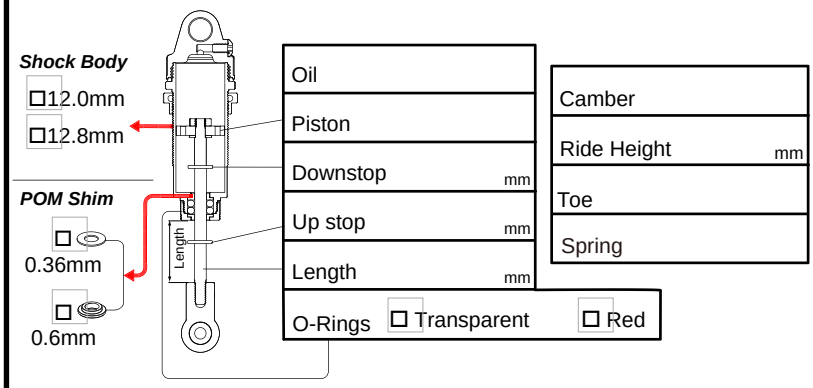

Motor	
Spur	T
Pinion	T
ESC	
Servo	☐ Std. Profile ☐ Low Profile
Battery	☐ Std. Short ☐ Low Short

Front	Radio System
Tire	ST-DR
Inserts	ST-EXP
Wheels	ST-Speed
Rear	TH-DR
Tire	TH-EXP
Inserts	TH-Speed
Wheels	

Body ☐ Standard ☐ Light

Wishbone hardness

Medium	High (Graphite)
☐ Front ☐ Rear	☐ Front ☐ Rear

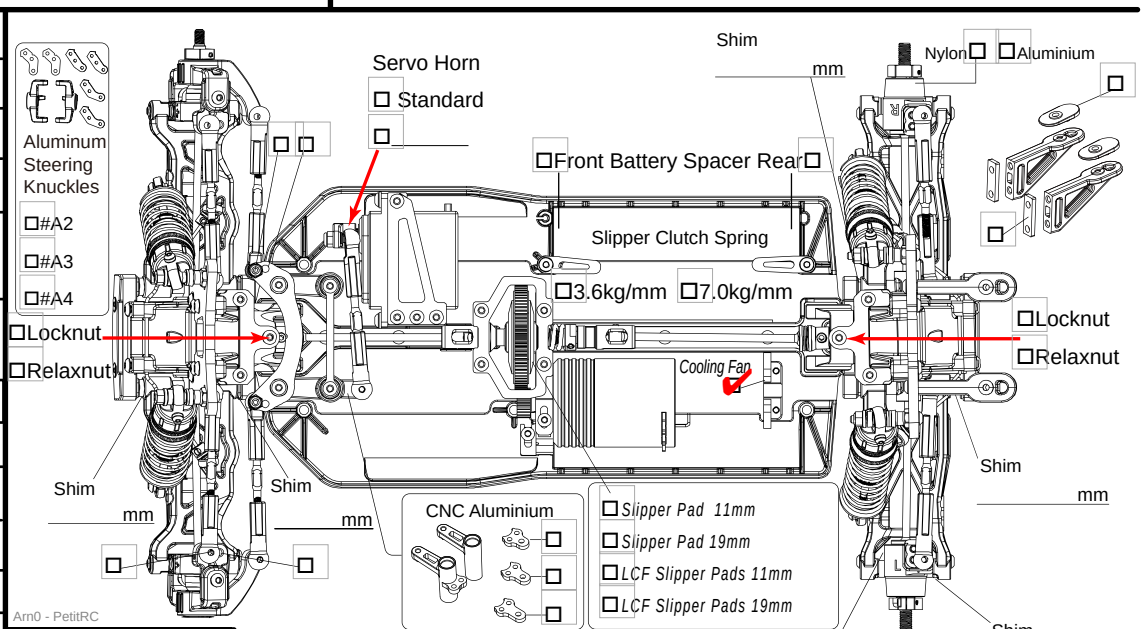

Tyres Notes

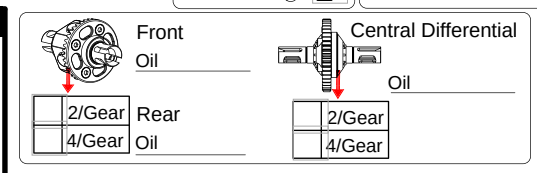

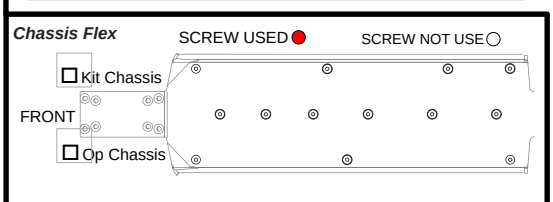
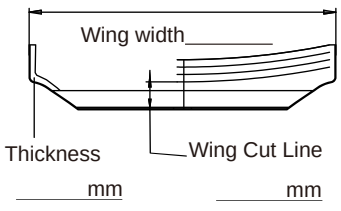
Wing_____