Made with Xodo PDF Reader and Editor

PR B10TR SETUP SHEET

PR RACING

Driver: Joey Fisher
Date: June 21 2025
Track: Beachline
Track: Summer Shootout

FRONT SUSPENSION

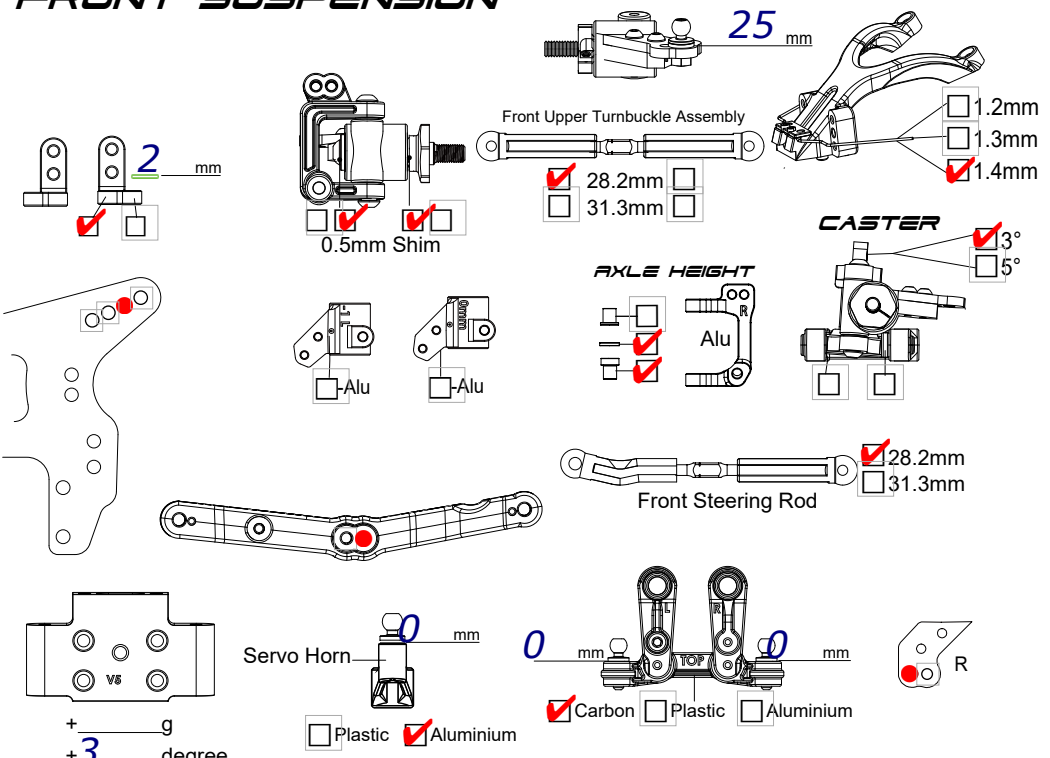

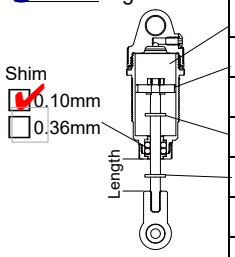

Oil	600
Piston	2h 1.7
Spring	Avid Carpet 9 dot
Downstop	4mm
Upstop	
Length	23
O-Ring	

Camber	-1.5
Ride Height	16
Toe	0

REAR SUSPENSION

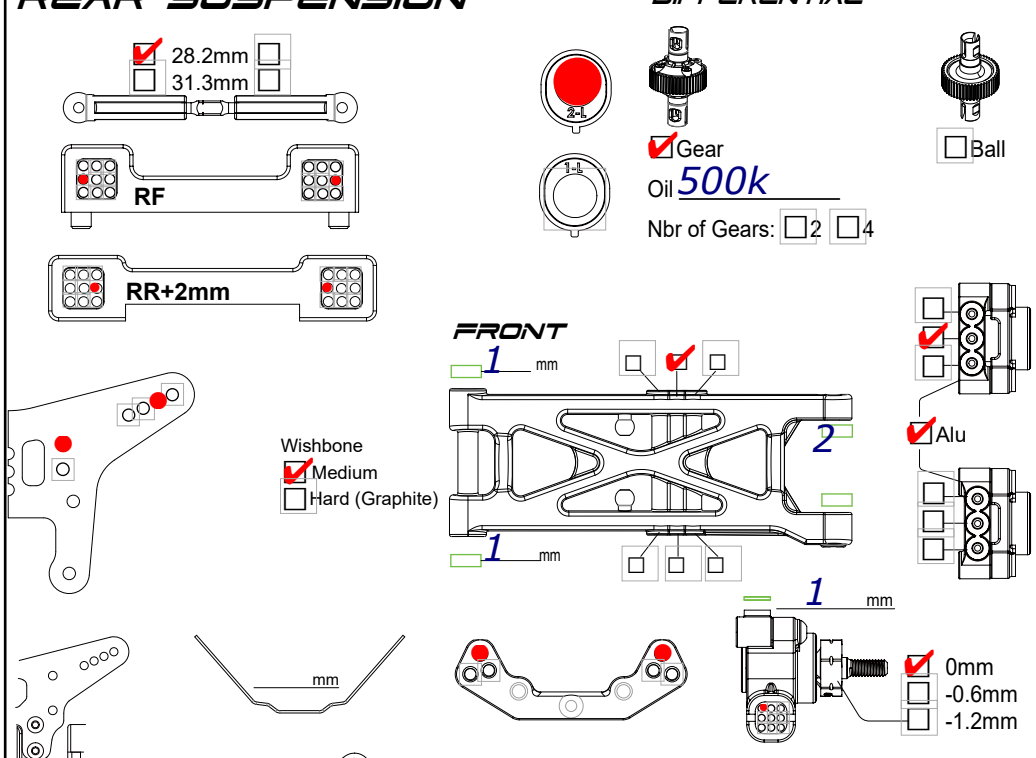

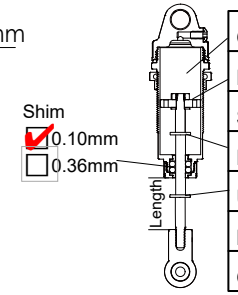

Oil	500
Piston	2h 1.8
Spring	Avid carpet 9 dot
Downstop	4mm
Upstop	
Length	30.5
O-Ring	

Camber	-1.5
Ride Height	16
Toe	

FRONT

Tire	Swagger
Inserts	JC
Wheels	PR
Motor	Surpass Rocket 13.5
Spur	75 T
Pinion	24 T
ESC	LRP
Servo	SAVOX SB2262
Profile	Std / Low
Battery	4200 LRP

REAR

Tire	JC Fuzz Bite
Inserts	JC
Wheels	PR

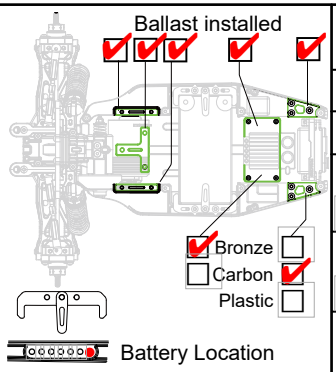

TRACK DESCRIPTION

LAYOUT	Open	Mixed	Tight
TRACTION	Low	Medium	High
SURFACE	Bumpy	Smooth	
COMPOSITION	Astroturf	Carpet	Clay
	Dirt	Grass	
CONDITION	Blue Groove	Hard Packed	Loamy
	Dusty	Dry	Wet

Track Had technical areas of low speed along with high speed areas

AERODYNAMICS

Body

Great for the technical layout while still being easy to drive and ZERO unpredictable characteristics.

Qualify 2nd, A1 win, A2 2nd for 2nd overall