PRB10TR SETUP SHEET

PR RACING

Driver _____ Track _____

Date _____ Track _____

FRONT SUSPENSION

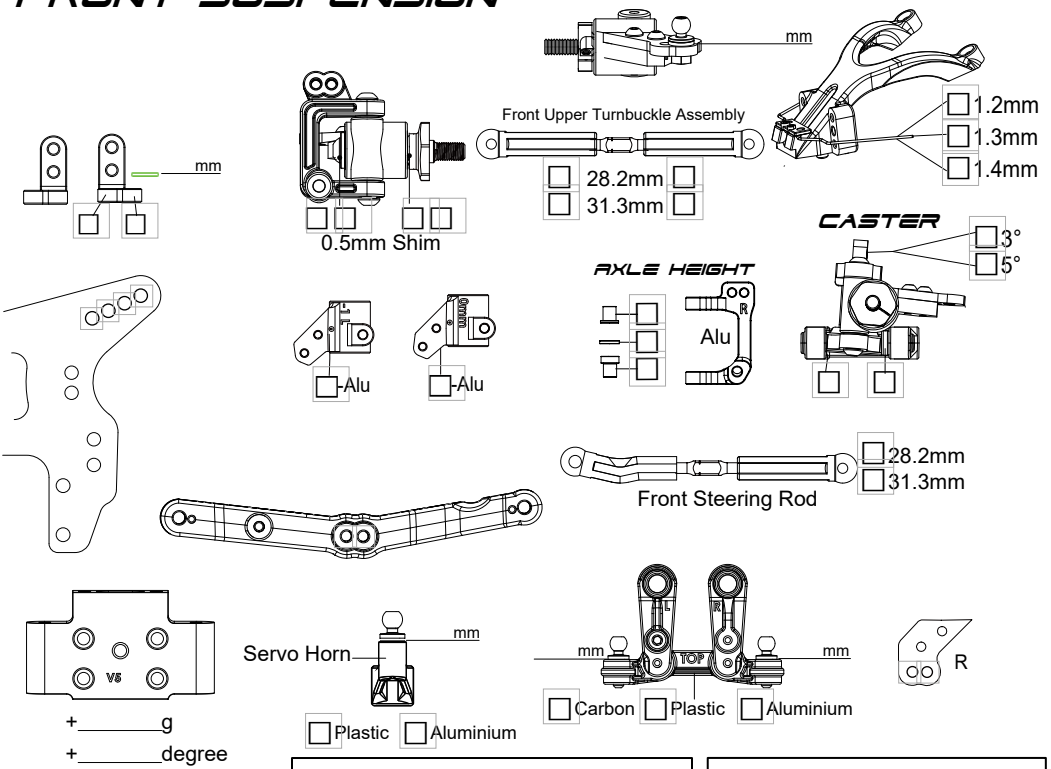

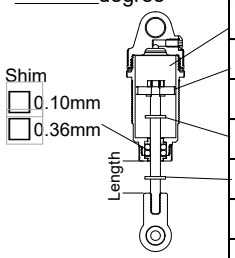

Oil	
Piston	
Spring	
Downstop	
Upstop	
Length	
O-Ring	

Camber	
Ride Height	
Toe	

REAR SUSPENSION

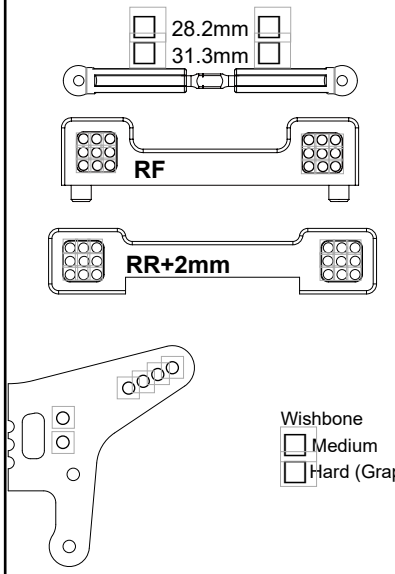

DIFFERENTIAL

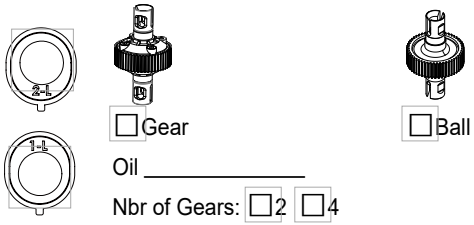

FRONT

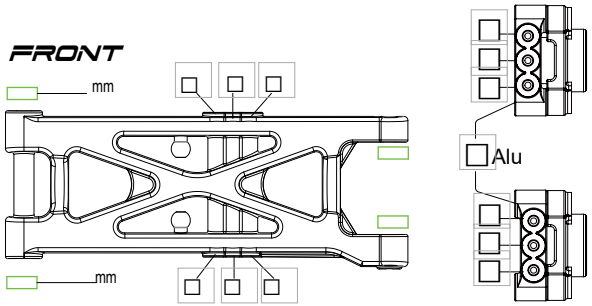

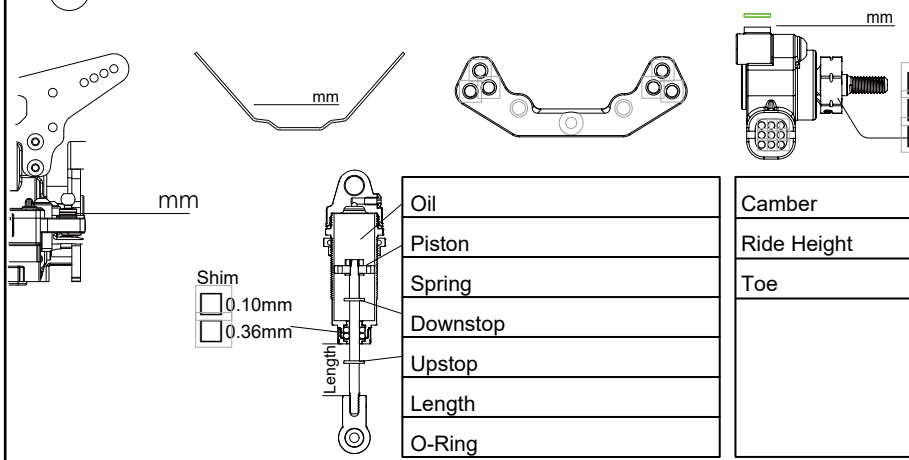

Oil	
Piston	
Spring	
Downstop	
Upstop	
Length	
O-Ring	

Camber	
Ride Height	
Toe	

FRONT

Tire	
Inserts	
Wheels	

REAR

Tire	
Inserts	
Wheels	

Motor	
Spur	T
Pinion	T
ESC	
Servo	
Profile	☐ Std ☐ Low
Battery	

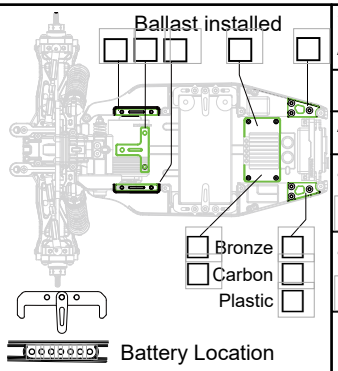

TRACK DESCRIPTION

LAYOUT	☐ Open	☐ Mixed	☐ Tight
TRACTION	☐ Low	☐ Medium	☐ High
SURFACE	☐ Bumpy	☐ Smooth	
COMPOSITION	☐ Astroturf	☐ Carpet	☐ Clay
	☐ Dirt	☐ Grass	☐
CONDITION	☐ Blue Groove	☐ Hard Packed	☐ Loamy
	☐ Dusty	☐ Dry	☐ Wet

AERODYNAMICS

Body