PRB10R SETUP SHEET

Driver: Nick
Date: 2025
Track: Daun
Event: EOS

FRONT SUSPENSION

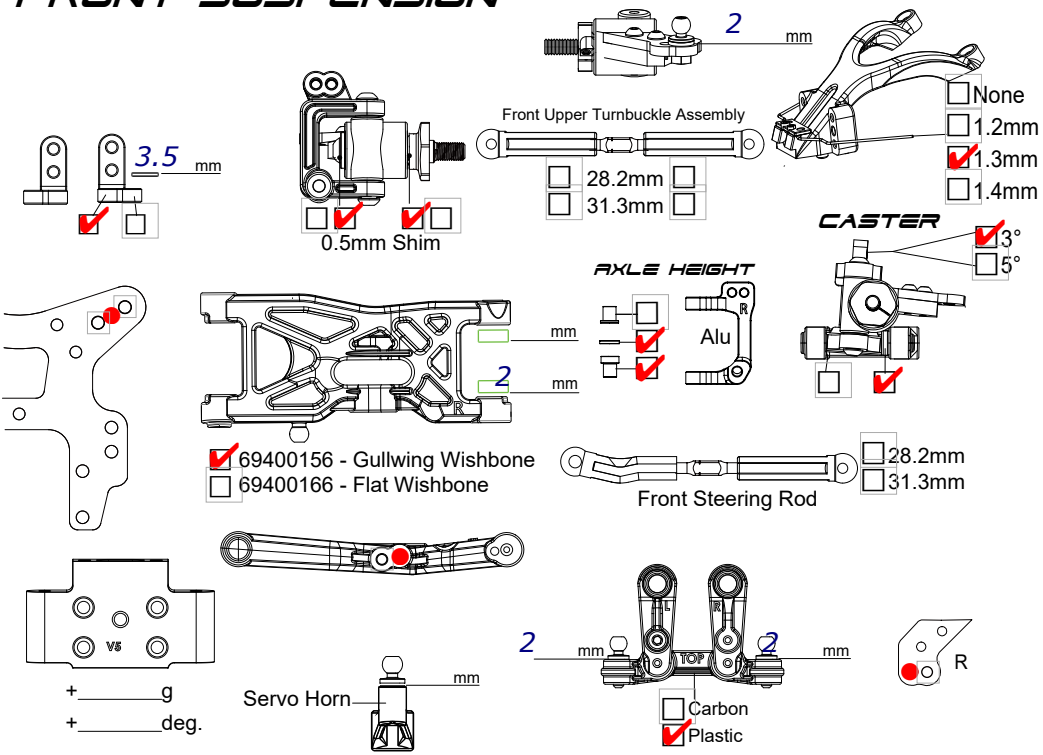

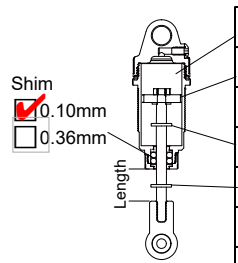

Oil	40 wt TLR
Piston	3x1.5
Spring	yellow/white
Downstop	1
Upstop	1
Length	22
O-Ring	

Camber	1
Ride Height	13
Toe	1

REAR SUSPENSION

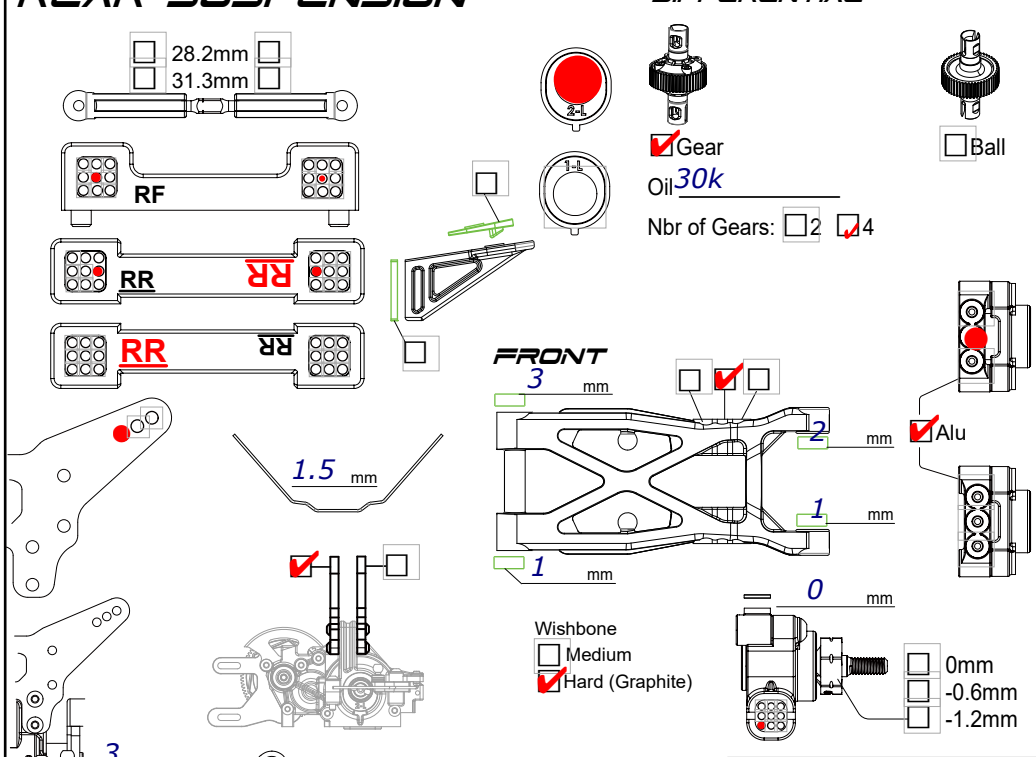

DIFFERENTIAL

Gear
Ball
Oil 30k
Nbr of Gears: 2 4

FRONT

3 mm
2 mm
1 mm
1 mm
Alu
Wishbone
Medium
Hard (Graphite)
0 mm
0mm
-0.6mm
-1.2mm

Oil	35wt TLR
Piston	3x1.6
Spring	blue/red
Downstop	2
Upstop	1
Length	29
O-Ring	

Camber	1
Ride Height	14
Toe	2mm between hub and hub carrier

FRONT

Tire	Splinter
Inserts	
Wheels	
Motor	HW 6.5
Spur	81 T
Pinion	22 T
ESC	HW XR10
Servo	Savox
Profile	Std / Low
Battery	IP 4800

REAR

Tire	Cactus
Inserts	
Wheels	

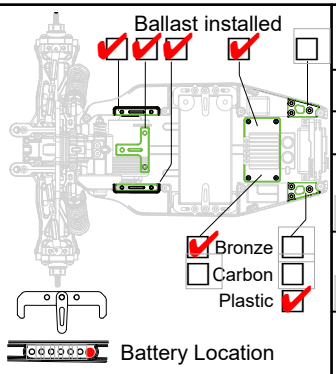

TRACK DESCRIPTION

LAYOUT	Open	Mixed	Tight
TRACTION	Low	Medium	High
SURFACE	Bumpy	Smooth	
COMPOSITION	Astroturf	Carpet	Clay
	Dirt	Grass	
CONDITION	Blue Groove	Hard Packed	Loamy
	Dusty	Dry	Wet

AERODYNAMICS

Body	STD
Rear Wing	STD
Front Wing	No