MSB1 1/10 2WD Electric Buggy

B2001 Ver. 2404 - Arno

Driver: William Schroeder

Date:

Track:

Event: Pre Invite Testing

Size: Open ☐ Medium ☑ Tight ☐

Traction: High ☐ Medium ☑ Low ☐

Condition: Smooth ☐ Bumpy ☑ Dry ☐ Wet ☐

Composition: Carpet ☐ Dirt ☑ Astroturf ☐

Grass ☐

Front Suspension

Ride Height: 17mm

Camber: -2

Toe: 17.6mm gap

Anti-Roll Bar: no

Front Bulkhead Spacer:

Plastic 0 mm / Brass 0 mm

Shock Pivot Ball Position:

Fwd ☑ Back ☐

MTC Steering Links, 1mm spacer
Aluminum servo horn (15.5mm)
Aluminum Bellcranks
Titanium Screws, Links, Wheel Nuts (1up)
1Up bearings

Ackerman Position

-1 ☐
-0.5 ☐
0 ☐
0.5 ☑
1 ☐

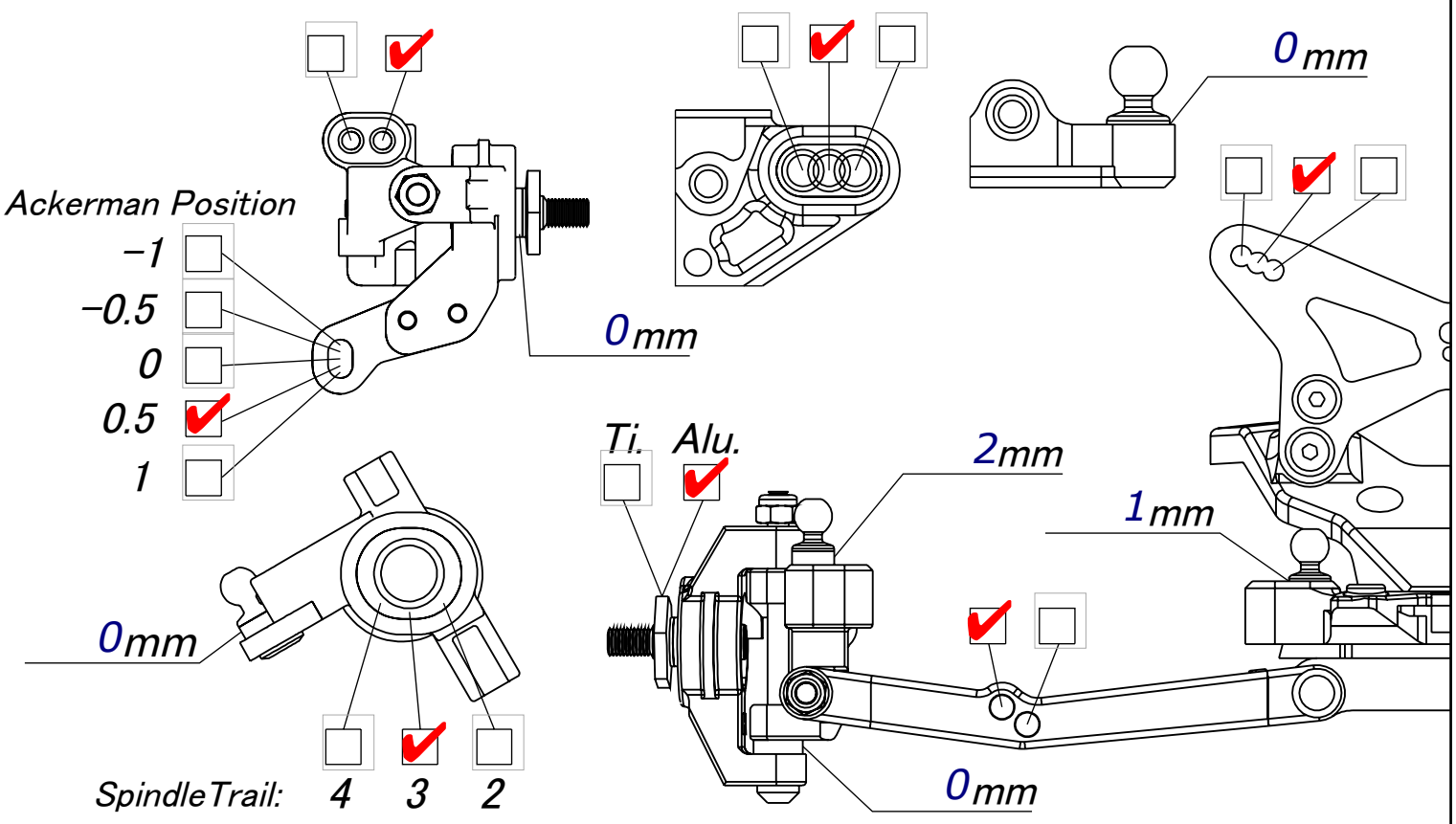

Rear Suspension

Ride Height: 17mm

Camber: -2

Anti-Roll Bar: no

Arm Position: Fwd ☑ Back ☐

Hub Position: Fwd ☐ Mid ☑ Back ☐

Shock Pivot Ball Position:

Fwd ☑ Back ☐

slipper locked, standard slipper assembly.

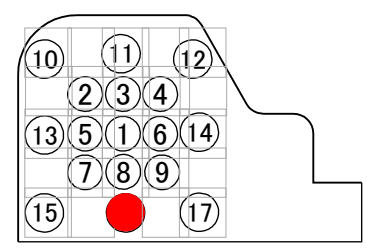

C Mount: kit

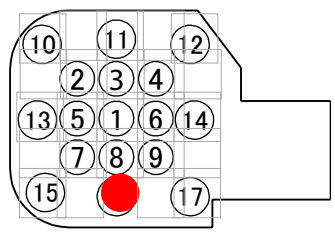

D Mount: kit

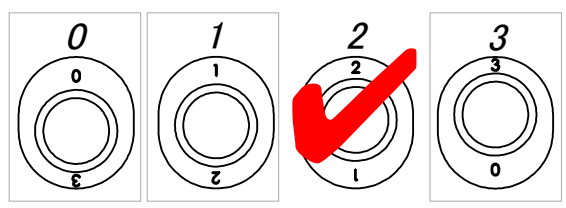

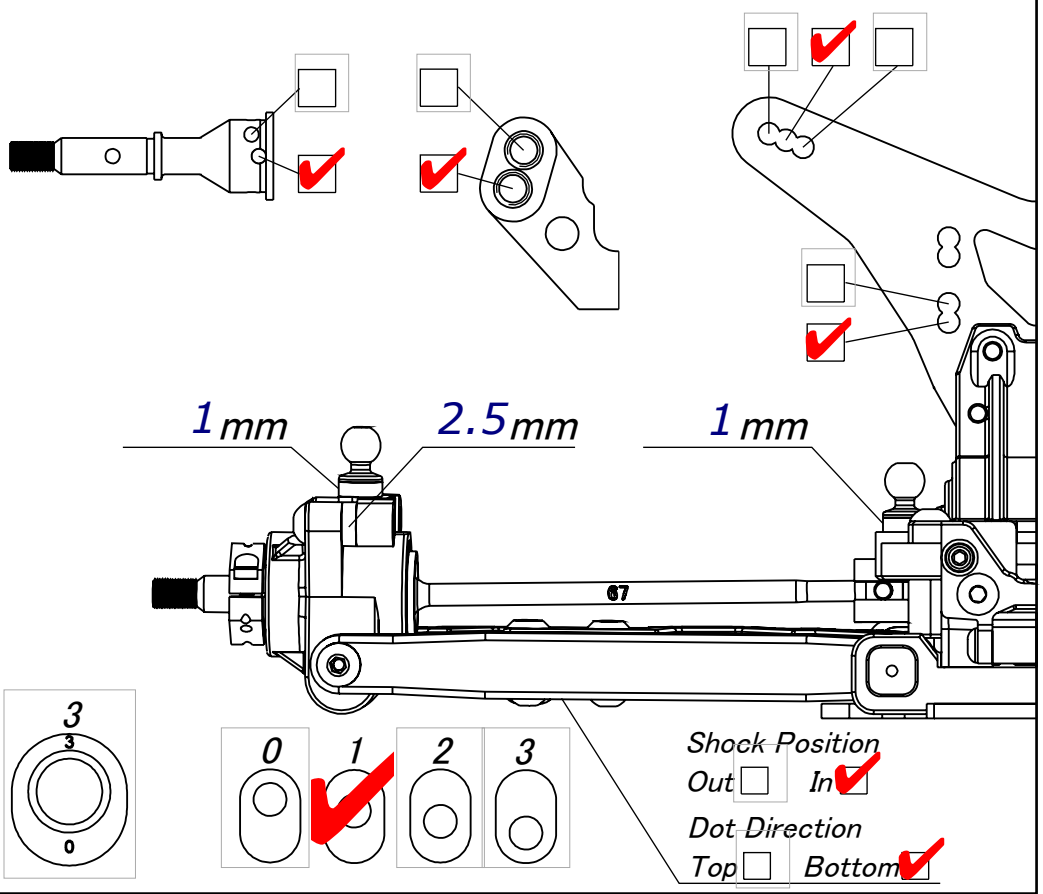

Shock Position

Out ☐ In ☑

Dot Direction

Top ☐ Bottom ☑

Shocks	Front	Rear
Piston:	FP 2.5mm | 2x1.8	FP 2.5mm | 1.8+1.9
Oil:	350	350
Spring:	Mugen 3 Dot	Mugen 2 Dot
Length:	23.5mm	29mm
Limiters:	Int: 0 Ext: 0	Int: 2 Ext: 0
Eyelet Lenght:	Std ☐ +2 ☑	Std ☑ +2 ☐
Cup Offset:	Low ☐ Mid ☐ High ☑	Low ☐ Mid ☑ High ☐

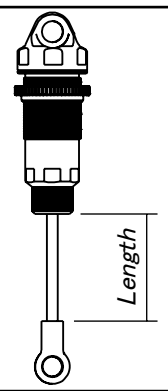

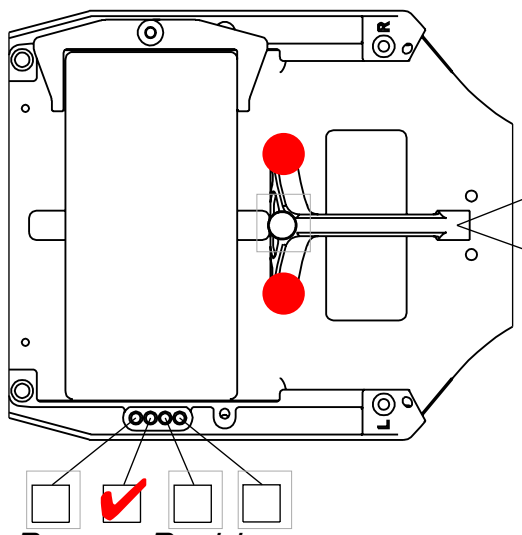

Chassis Brace
☐ Plastic
☑ Rubber

ESC Plate
☐ Plastic
☐ Carbon
☐ Brass

Battery Position ☐ ☑ ☐ ☐

Total Weight: 1530 g

Electronics

Radio: FlySky

Servo: Reedy RT

ESC: Reedy 610R

Motor : G5

Gearing: 72/29

Battery: SMC 4800

Weight

Servo Weight: Yes ☐ No ☐

Battery Weight: 19g ☐ 37g ☐

Differential

Gear Diff ☐ 2 Gear ☐ 4 Gear ☐ Oil : Friction O-ring:

Ball Diff ☑ Setting:

Tire	Front	Rear
Type:	HotRace Slick V1	HotRace Slick V1
Compound:	White	White
Insert:	blue, glued	blue
Wheel:	Mugen	Mugen
Additive:	TDK	TDK

Body & Wing

Body: Eurus 2d LW

Rear Wing: Mugen

Wing Angle: 0° ☐ 3° ☐ 6° ☑

Front Wing: no Low ☐ High ☐