MSB1 1/10 2WD Electric Buggy

B2001 Ver. 2404 – Arno

Driver: William Schroeder

Date: 8/2/26

Track: HobbyPlex Raceway Omaha

Event: Laps During INS podium pics

Size: Open ☑ Medium ☐ Tight ☐

Traction: High ☑ Medium ☐ Low ☐

Condition: Smooth ☐ Bumpy ☑ Dry ☐ Wet ☐

Composition: Carpet ☐ Dirt ☑ Astroturf ☐ Grass ☐

Front Suspension

Ride Height: 17mm

Camber: -2

Toe: 17.6mm gap

Anti-Roll Bar: None

Front Bulkhead Spacer:

Plastic 0 mm / Brass 0 mm

Shock Pivot Ball Position:

Fwd ☑ Back ☐

1UpRacing Ti Screws + Turnbuckles + Wheel nuts
Aluminum Steering Bellcranks and servo horn
T2804S-Ba, Steering Linkage, MTC

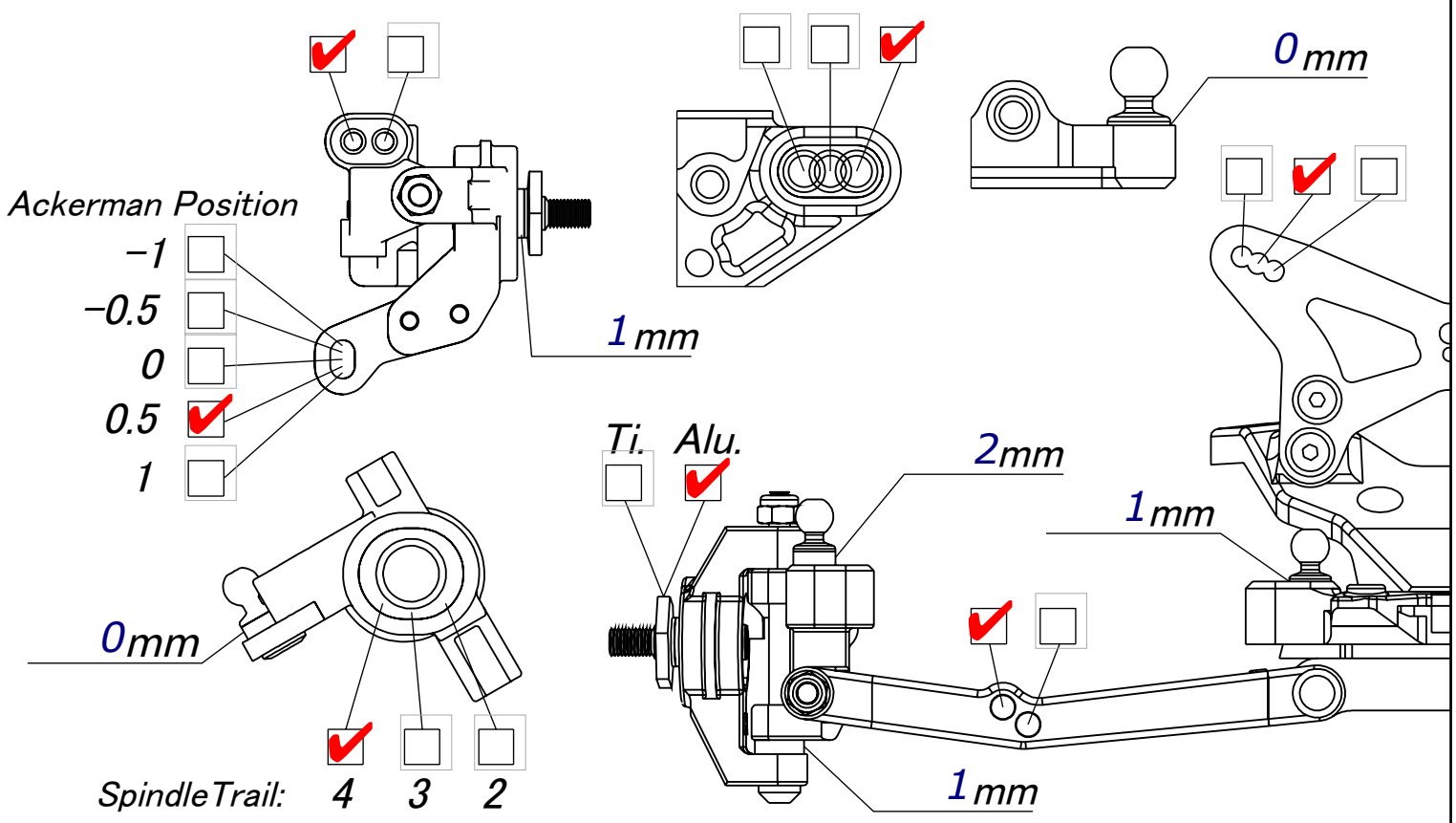

Rear Suspension

Ride Height: 17mm

Camber: -2

Anti-Roll Bar: No

Arm Position: Fwd ☑ Back ☐

Hub Position: Fwd ☐ Mid ☑ Back ☐

Shock Pivot Ball Position:

Fwd ☑ Back ☐

1UpRacing Ti Screws + Turnbuckles + Wheel nuts
Flashpoint Lower shock mounts

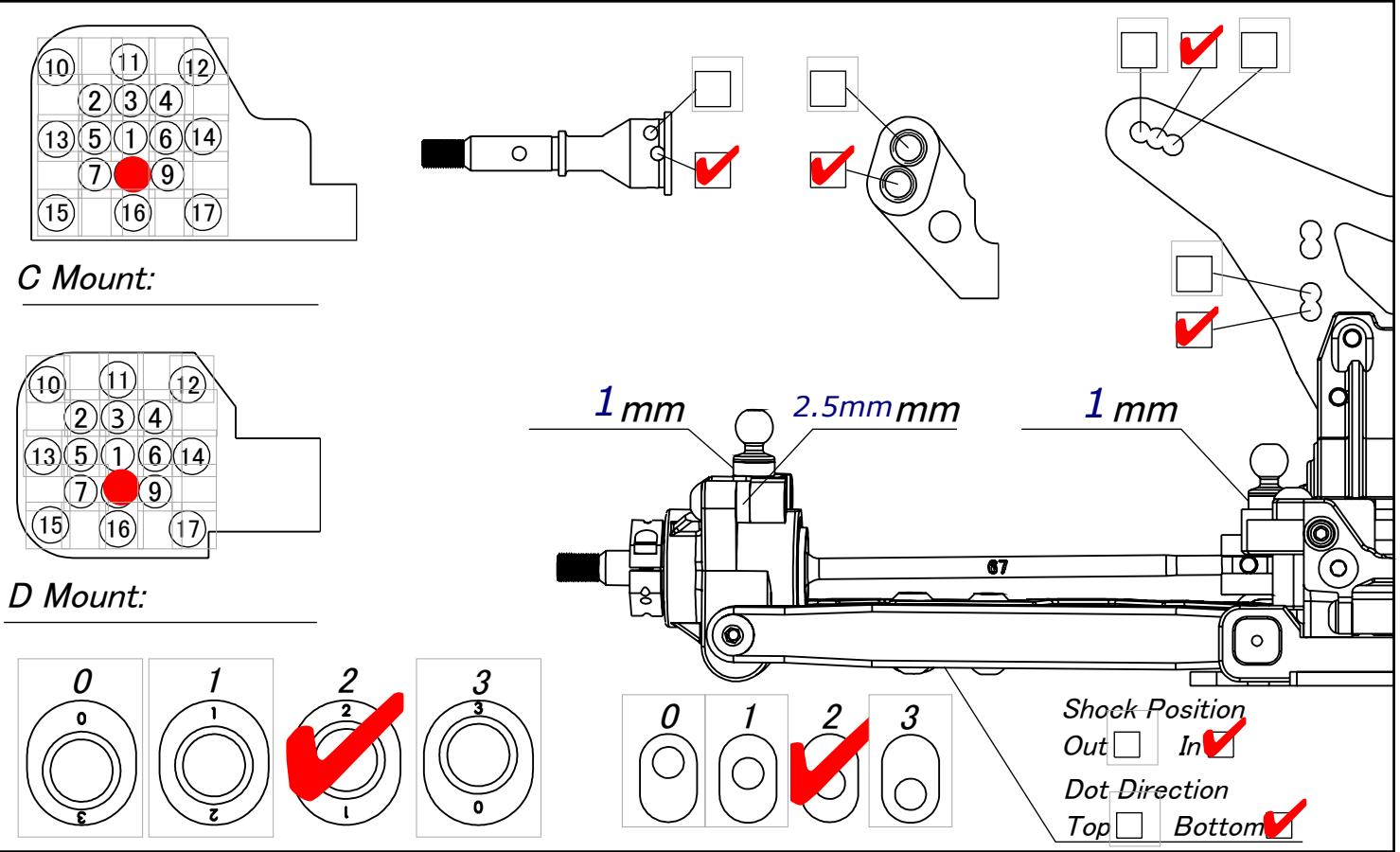

Shocks	Front	Rear
Piston:	2.5mm | 2x1.7	2.5mm | 2x1.8
Oil:	27.5 AE	350 FP
Spring:	Mugen 3 dot	1Up Red
Length:	23.5mm	28mm
Limiters:	Int: 0 Ext: 0	Int: 2mm Ext: 0
Eyelet Lenght:	Std ☐ +2 ☑	Std ☑ +2 ☐
Cup Offset:	Low ☐ Mid ☐ High ☑	Low ☐ Mid ☑ High ☐

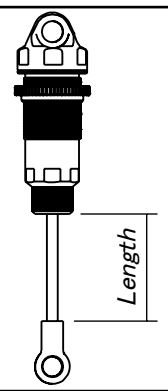

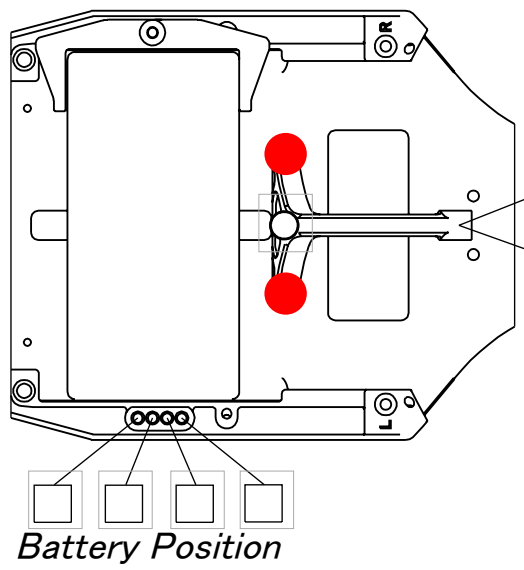

Total Weight: 1530 g

Electronics

Radio: NB4+

Servo: NitroPro / JTP RT2

ESC: Reedy 610R, 12g wire

Motor : HW G5

Gearing: 72/29

Battery: SMC 4800 LP

Weight

Servo Weight: Yes ☐ No ☑

Battery Weight: 19g ☐ 37g ☐

Differential

Gear Diff ☐ 2 Gear ☐ 4 Gear ☐ Oil : Friction O-ring:

Ball Diff ☑ Setting:

Tire	Front	Rear
Type:	HotRace	HotRace
Compound:	White	White
Insert:	Blue, Punched + glued	Blue, Standard
Wheel:	Mugen	Mugen
Additive:	yes	yes

Body & Wing

Body: HotRace Eurus 2D LW (.5mm)

Rear Wing: Mugen

Wing Angle: 0° ☐ 3° ☐ 6° ☑

Front Wing: Low ☐ High ☐