MSB1 1/10 2WD Electric Buggy

B2001 Ver. 2404 – Arno

Driver: Sören Sparbier

Date: 28.12.25

Track: Langenfeld

Event: Five-Days Round 2

Size: Open ☐ Medium ☑ Tight ☐

Traction: High ☐ Medium ☑ Low ☐

Condition: Smooth ☑ Bumpy ☐ Dry ☑ Wet ☐

Composition: Carpet ☑ Dirt ☐ Astroturf ☐

Grass ☐ _____ ☐

Front Suspension

Ride Height: 11mm

Camber: 2°

Toe: 0°

Anti-Roll Bar: std.

Front Bulkhead Spacer:

Plastic 2mm / Brass mm

Shock Pivot Ball Position:

Fwd ☑ Back ☐

Ackerman Position

−1 ☐
−0.5 ☐
0 ☐
0.5 ☑
1 ☐

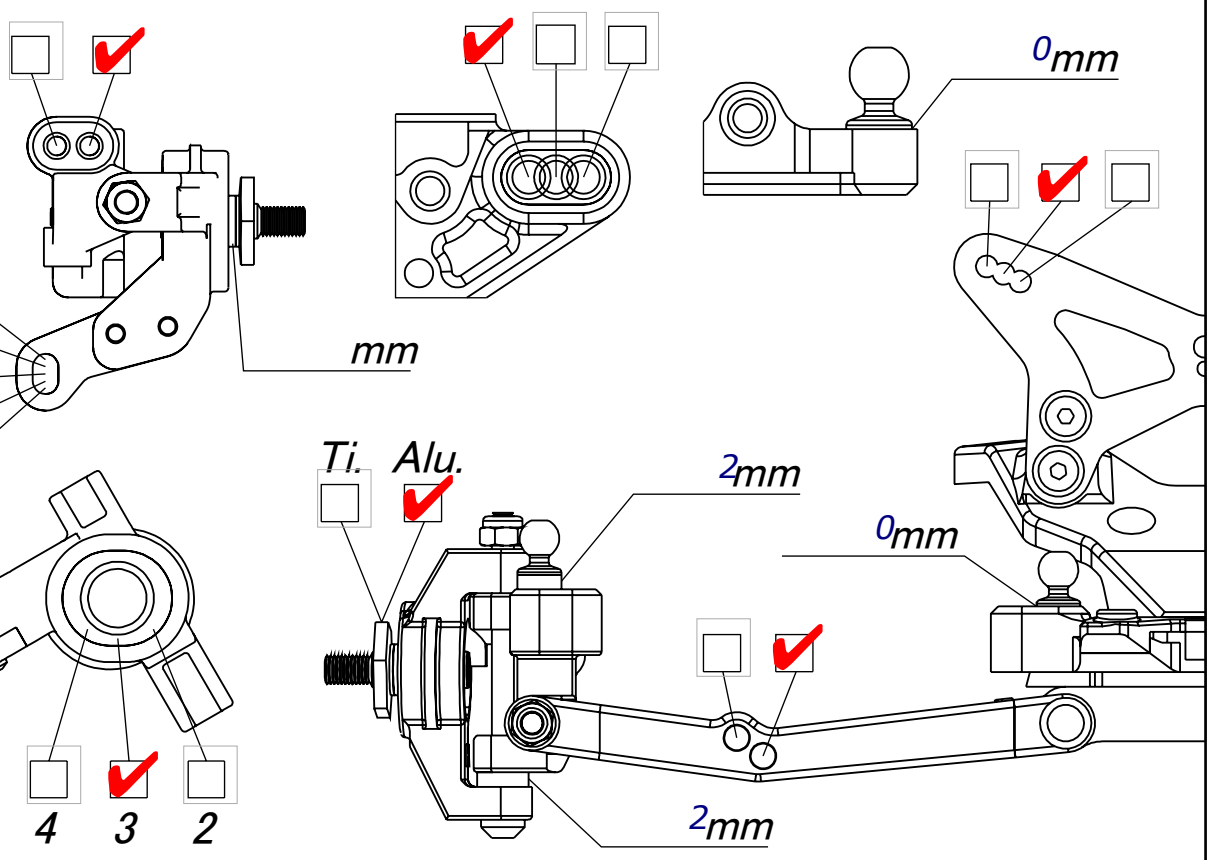

SpindleTrail: 4 3 2

Rear Suspension

Ride Height: 12mm

Camber: 2°

Anti-Roll Bar: std

Arm Position: Fwd ☑ Back ☐

Hub Position: Fwd ☐ Mid ☑ Back ☐

Shock Pivot Ball Position:

Fwd ☐ Back ☐

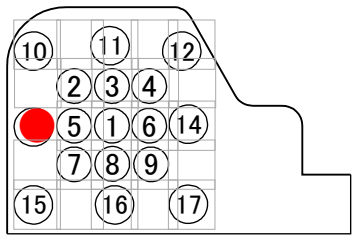

C Mount: 1

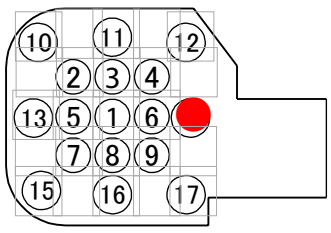

D Mount: 1

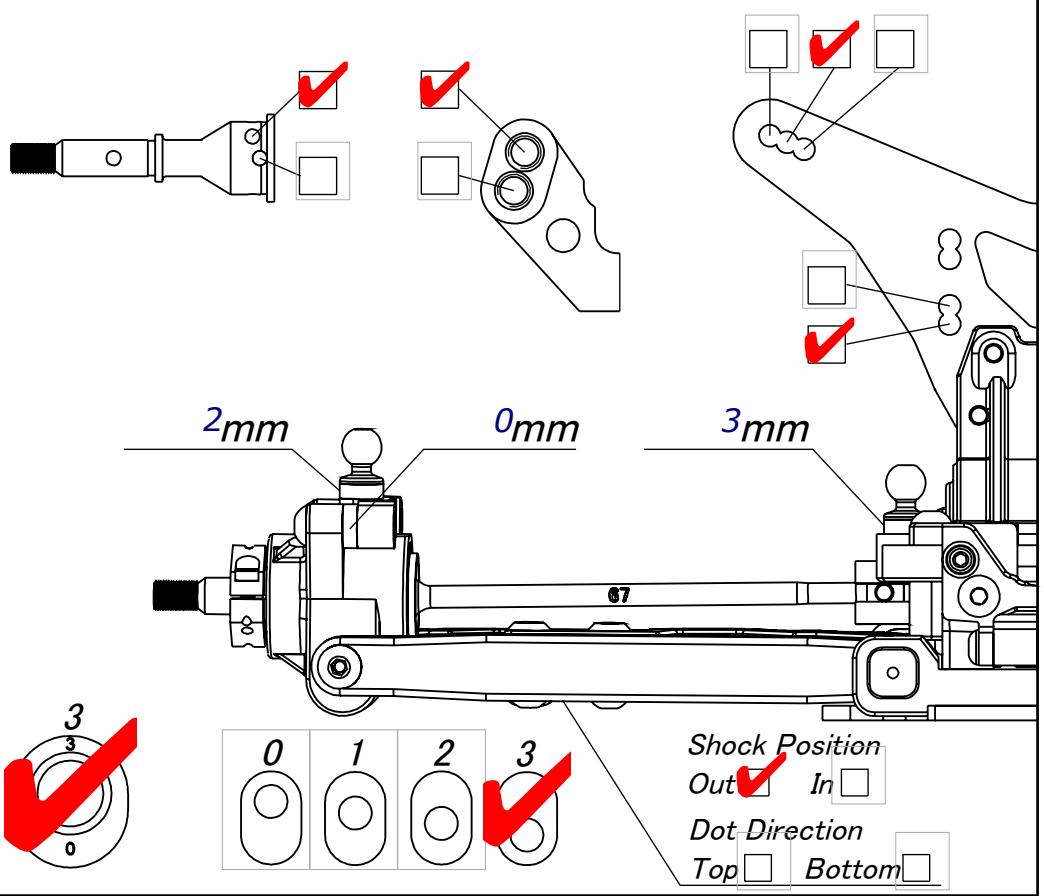

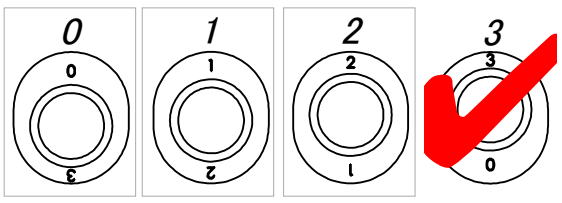

Shock Position

Out ☑ In ☐

Dot Direction

Top ☐ Bottom ☐

Shocks

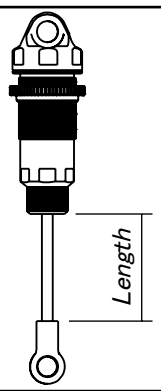

	Front	Rear
Piston:	1,6 x 4	1,7 x 4
Oil:	650	550
Spring:	2 dot	2 dot
Length:	22	28
Limiters:	Int: 1 Ext: 2	Int: 0 Ext: 2
Eyelet Lenght:	Std ☑ +2 ☐	Std ☐ +2 ☐
Cup Offset:	Low ☐ Mid ☑ High ☐	Low ☐ Mid ☑ High ☐

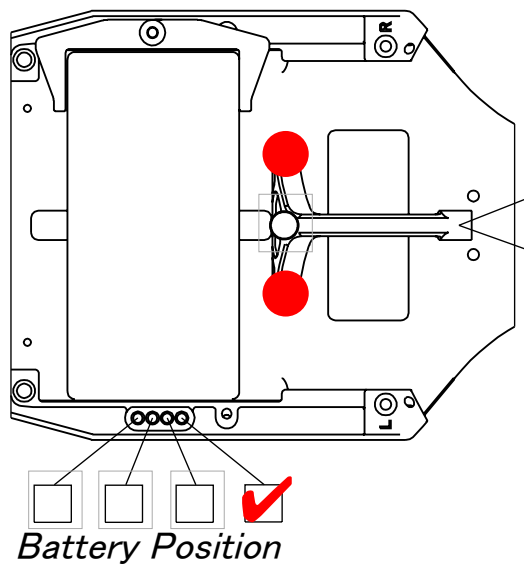

Chassis Brace

☑ Plastic

☐ Rubber

ESC Plate

☑ Plastic

☐ Carbon

☐ Brass

Battery Position ☐ ☐ ☐ ☑

Total Weight: g

Electronics

Radio: Samwa M17

Servo: PowerHD

ESC: LRP Flow X

Motor : LRP X22 6,5T

Gearing: 78 / 24

Battery: LRP 4200

Weight

Servo Weight: Yes ☐ No ☑

Battery Weight: 19g ☐ 37g ☐

Differential

Gear Diff ☑ 2 Gear ☐ 4 Gear ☑ Oil :7K Friction O-ring:

Ball Diff ☐ Setting:

Tire	Front	Rear
Type:	Splinter	Cactus
Compound:	yellow	yellow
Insert:		medium
Wheel:	Schumacher	Schumacher
Additive:		

Body & Wing

Body: std.

Rear Wing: std.

Wing Angle: 0° ☐ 3° ☑ 6° ☐

Front Wing: std. Low ☑ High ☐