MSB1 1/10 2WD Electric Buggy

B2001 Ver. 2402 – Arno

Driver: Patrick Eisenmenger

Date: 16.11.2025 (Finalsday)

Track: SIM2025 (Solms, Germany)

Event: Sim2025

Size: Open ☐ Medium ☑ Tight ☑

Traction: High ☑ Medium ☑ Low ☐

Condition: Smooth ☑ Bumpy ☐ Dry ☑ Wet ☐

Composition: Carpet ☑ Dirt ☐ Astroturf ☐ Grass ☐ _____ ☐

Front Suspension

Ride Height: 12mm

Camber: -1.5°

Toe: -1.0°

Anti-Roll Bar: 1.2mm

Front Bulkhead Spacer:

Plastic mm / Brass 1 mm

Notes:
26mm Droop measured under Axle, Chassis sitting on 20mm Blocks

Chassis Weight bias 43F / 57B

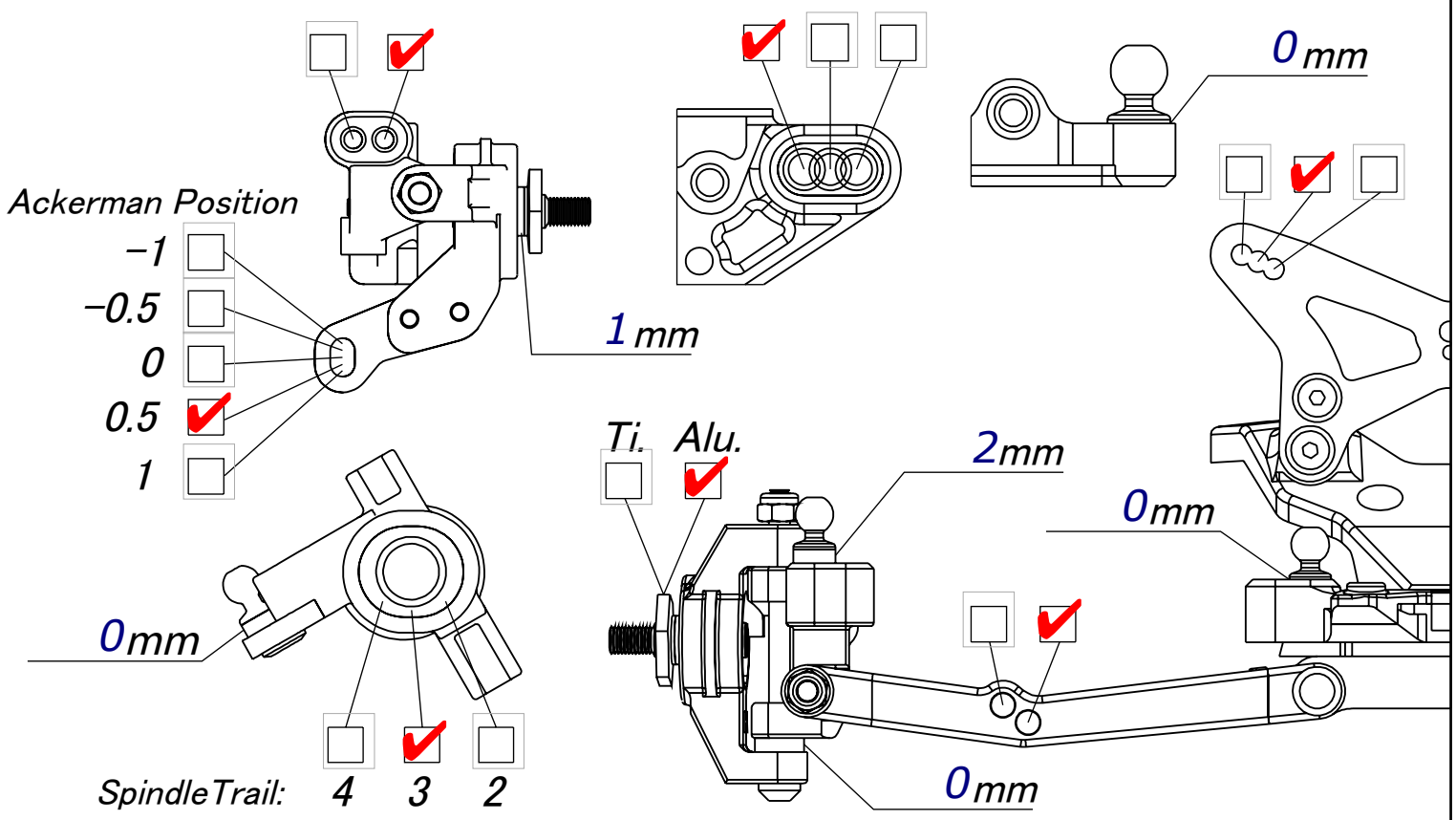

Rear Suspension

Ride Height: 13mm

Camber: -2°

Anti-Roll Bar: 1.4mm

Arm Position: Fwd ☐ Back ☑

Hub Position: Fwd ☐ Mid ☐ Back ☑

Notes:
0.5mm Offset D-Block (up) so Position is 4

23mm Droop measured under Axle, Chassis sitting on 20mm Blocks

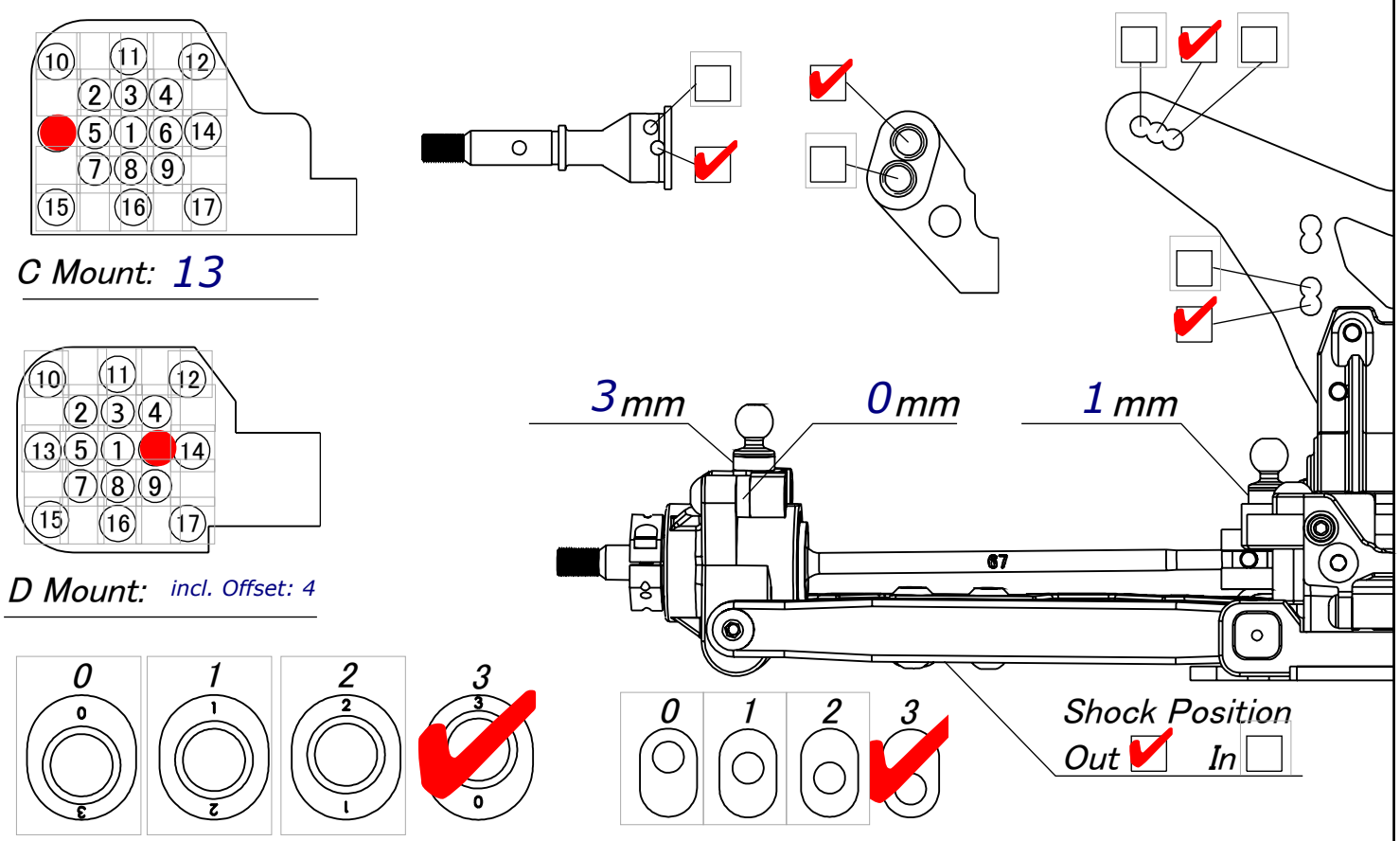

Shocks	Front	Rear
Piston:	2mm 3x1.5mm	2mm 3x1.6
Oil:	AE 45wt / 575cst	AE 42.5wt / 538cst
Spring:	WS Orange 4.25	WS Blue 2.5
Length:	23.5mm	27.5mm
Limiters:	Int: 0 Ext: 2	Int: 3 Ext: 2
Eyelet Lenght:	Std ☑ +2 ☐	Std ☑ +2 ☐
Cup Offset:	Low ☐ Mid ☑ High ☐	Low ☑ Mid ☐ High ☐

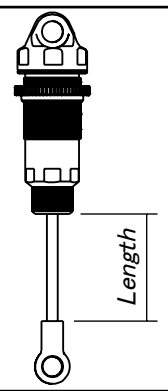

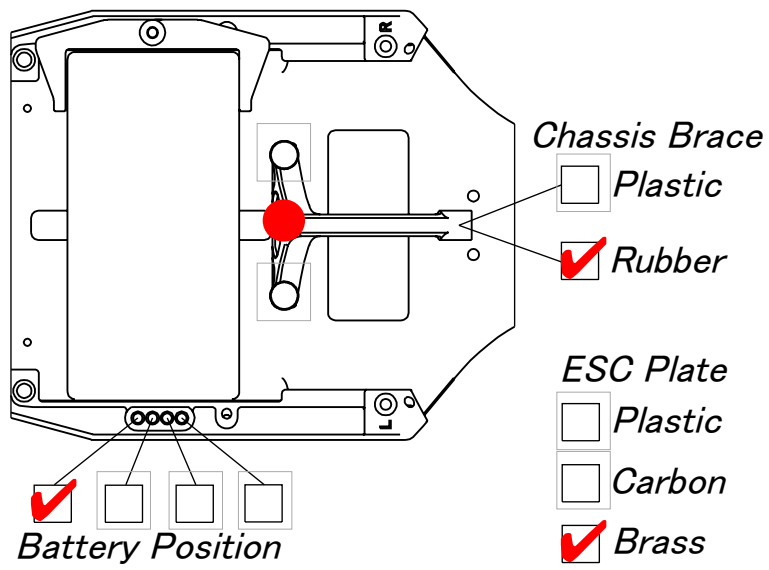

Total Weight: 1530g g

Electronics	
Radio:	Sanwa M12s
Servo:	SRT BH815S
ESC:	HW XR10 Pro G2S
Motor :	HW 5.5
Gearing:	21/78
Battery:	IP4400 mc2 145g

Weight	
Servo Weight:	Yes ☐ No ☑
Battery Weight:	19g ☐ 37g ☐

Differential	
Gear Diff ☑	2 Gear ☐ 4 Gear ☑
Oil :	10k cst
Friction O-ring:	
Ball Diff ☐	Setting: 1.2g oil / 350diff-analyzer

Tire	Front	Rear
Type:	Splinters	Cactus
Compound:	Yellow	Yellow
Insert:	none	Cragg v2
Wheel:	Mugen Slim	Mugen
Additive:	CA up to the Thread	

Body & Wing	
Body:	Mugen LW
Rear Wing:	Mugen
Wing Angle:	0° ☑ 3° ☐ 6° ☐
Front Wing:	T-Works Low ☑ High ☐