Name: Mark Logan	Date: 7/27	Event: practice	Track: FSH

Track Conditions

☑ Indoor	☐ Clay	☑ Carpet	☐ Tight	☐ Smooth	☐ Hard Packed	☐ Blue Groove	☐ Wet	Bite: ☐ Low ☐ Med ☑ High	Other:
☐ Outdoor	☐ Dirt	☐ Astro	☐ Open	☐ Rough	☐ Loose/Loamy	☐ Dry	☐ Dusty	Tread: ☐ Pin ☐ Ghost ☐ Slicks	

Front Suspension

Ride Height	18
Camber	-2
Toe	-.5
Sway Bar	1.3 mm

Notes:

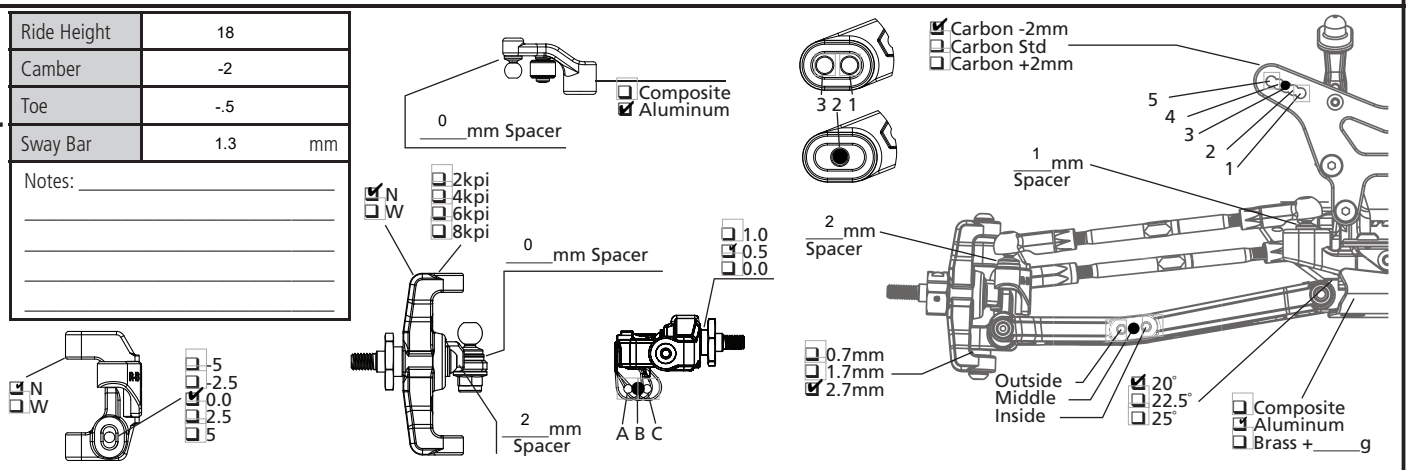

Rear Suspension

Ride Height	19
Camber	-1.5
Sway Bar	1.5 mm

Notes:

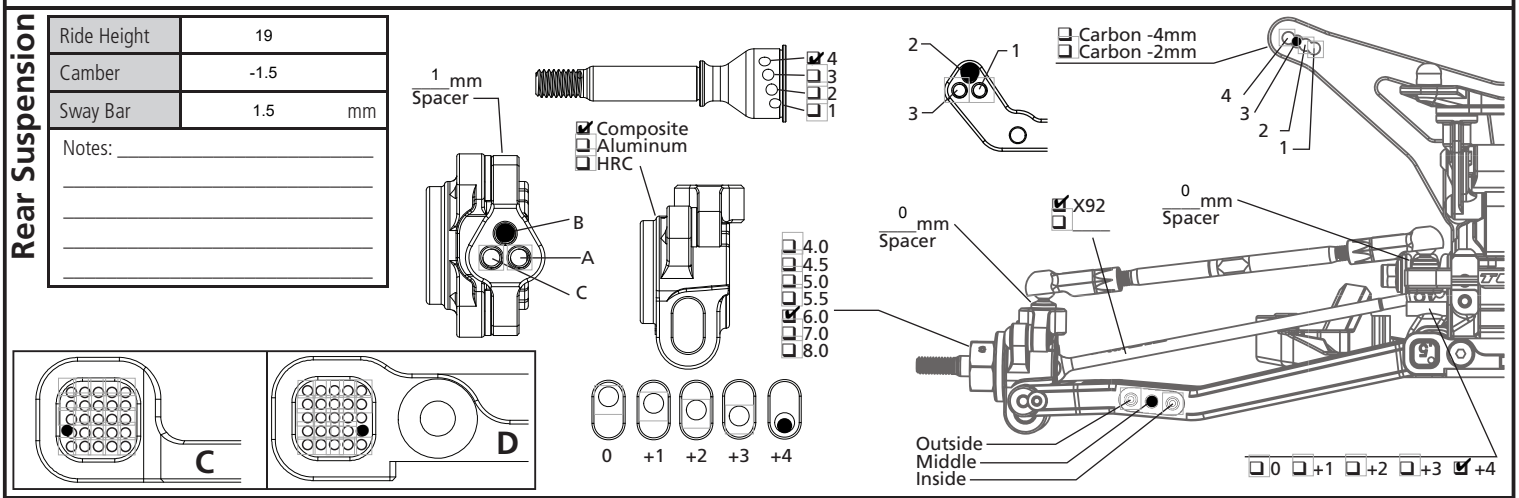

Chassis

Drive Train

Diff Type	☐ Ball Diff ☑ Gear Diff
Setting/Fluid	200k
Internal Gears	☑ Steel ☐ Composite
Planet Gears	☑ 2 ☐ 4
Slipper	☑ Slipper ☐ Direct Drive

Aerodynamics

Body	sector
Notes	

Tires

	Front	Rear
Brand	JC	JC
Tread	swagger	fuzzbite
Compound	pink	pink
Insert		
Sauce		
Wheel	JC mono	JC mono
Notes		

Shocks

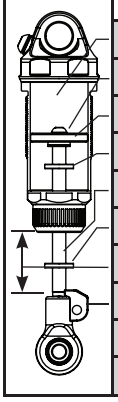

	Front	Rear
Oil	37.5	32.5
Piston Holes	1x1.8/1x1.9	2x2.0
Piston	☑ 2mm ☐ 2.5mm	☑ 2mm ☐ 2.5mm
Limiter, Int	mm	mm
Shaft Dia	☑ 3.0mm ☐ 3.5mm	☑ 3.0mm ☐ 3.5mm
Limiter, Ext	mm	mm
Stroke	23.5 mm	30 mm
Eyelet	☑ Std ☐ +2mm	☑ Std ☐ +2mm
Spring	green	blue
Spring Cup	☐ Low ☑ Mid ☐ High	☑ Low ☐ Mid ☐ High

Electronics

Radio	m17	ESC	RSXpro
Servo	t-180	Thro Prof	
Battery	5600mah	Timing Adv	0
Battery Wt	g	Initial Brake	
Motor	specR2	Drag Brake	0
Gearing	26 / 78	Thr/Bra EPA	100 / 75

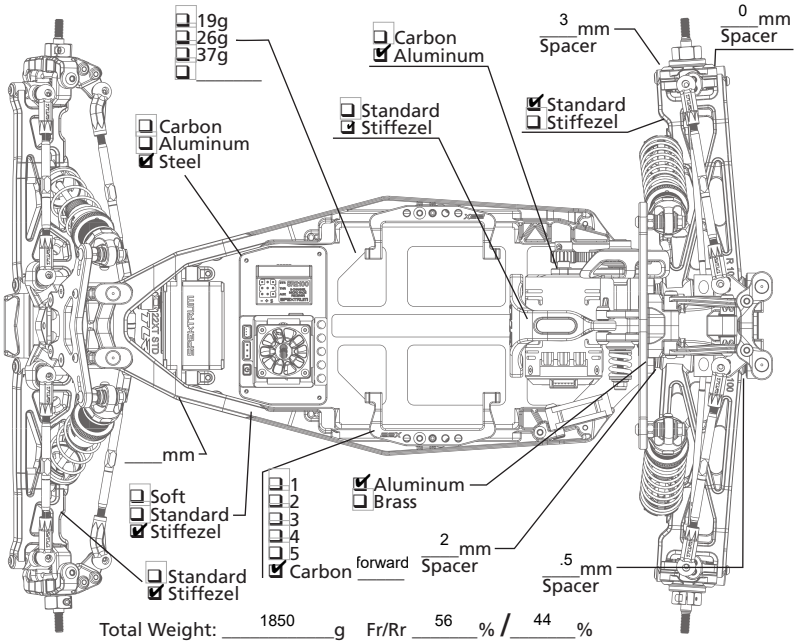

Total Weight: 1850 g Fr/Rr 56 % / 44 %