LAZER ZX5 Editable SETTING SHEET

Click-Edit-Print

KYOSHO — THE FINEST RADIO CONTROL MODELS

Name	Date	Track	Event
Doctor		Grass track	

Clear

Print

Front Suspension

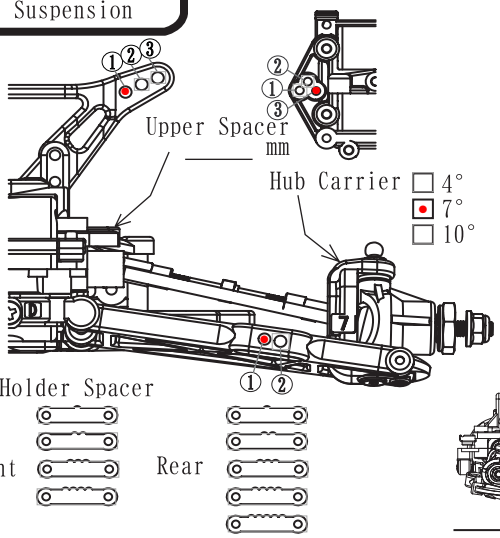

Upper Spacer ____ mm

Hub Carrier ☐ 4° ☒ 7° ☐ 10°

Sus. Holder Spacer

Front ____ Rear ____

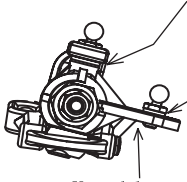

Axle Hight Spacer
☐ Up
☐ Low

Bump Steer Spacer ____ mm

Knuckle
☐ Standard
☐ Opposite

Camber Angle -1 °

Toe Angle -2 °

Sway bar ____

Front Diff.
☐ Rigid
☐ Oneway
☐ Diff.

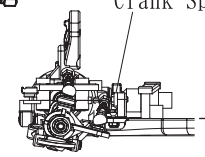

Crank Spacer ____ mm

Ride Height ____ mm

Shock Piston 3-C
Shock Oil # 40wt
Shock Spring Light Green

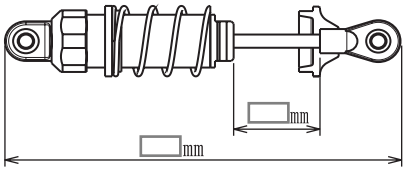

____ mm

____ mm

Rear Suspension

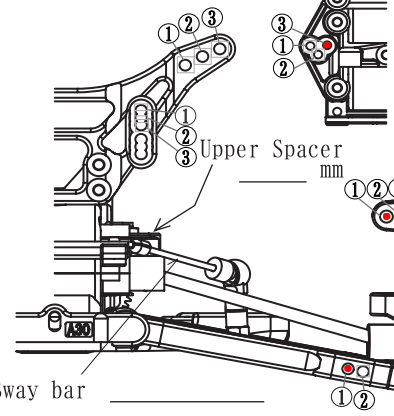

Upper Spacer ____ mm

Sus. Holder
Front ☐ BF ☐ BR
Rear ☐ A15 ☐ A25 ☐ A30

Sus. Holder Spacer
Front ____ Rear ____

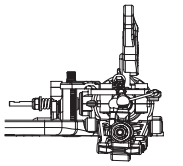

Ride Height ____ mm

Hub Carrier Spacer ____ mm

Hub Carrier
☐ 0°
☒ 2°

Hub Carrier Height
☐ Up
☐ Middle
☐ Down

Sway bar ____

Camber Angle -1 °

Shock Piston 3B
Shock Oil # 30wt
Shock Spring Silver

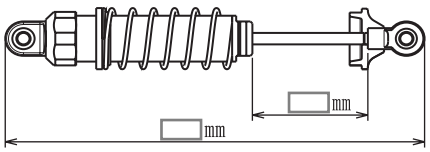

____ mm

____ mm

Tire

		Compound
Front Tire	Schu minispikes w outer row	Yellow
Rear Tire	Schu minispikes	yellow
Front Inserts		
Rear Inserts		

Other

Motor ____

Pinion/Spur ____ / ____

Wing ____

Wing Angle ☐ 0° ☐ 7° ☐ 4°

Center Shaft
☒ Oneway
☐ Direct

Slipper Sheet
☐ Red-White
☐ Red-Red
☐ White-White

Track Condition

☐ Smooth
☐ Bumpy
☐ Low Traction
☐ Med. Traction
☐ Higt Traction

☐ Dry
☐ Wet
☐ Dusty
☐ Indoor
☒ Outdoor

Spring Rate

#50	Black	#68	Blue
#55	Orange	#70	Silver
#60	Orange Yellow	#75	Light Green
#65	Yellow	#80	Green

Gear Ratio

Secondary Gear Ratio 2.5 (16:40)

	16	17	18	19	20	21	22	23	24	25
76		11.18	10.56	10.00	9.50	9.05	8.64	8.26	7.92	7.60
78	12.19	11.47	10.83	10.26	9.75	9.29	8.86	8.48	8.13	7.80

Shock Piston

Soft ⟷ Hard

2-B 2-C 2-D

3-A 3-B

Own composition (2-1.3)

Sway Bar

1.0	Nickel
1.1	Gold
1.2	Silver
1.3	Copper
1.4	Black
1.5	Golden
1.6	Chromium

Comments

max kick-up
2deg rear toe in