LAZER ZX5 Editable SETTING SHEET

Click-Edit-Print

KYOSHO — THE FINEST RADIO CONTROL MODELS

Name	Date	Track	Event
Vincent Heligoin	Sept 02,2007	Dhuizon	French Cup

Clear

Print

Front Suspension

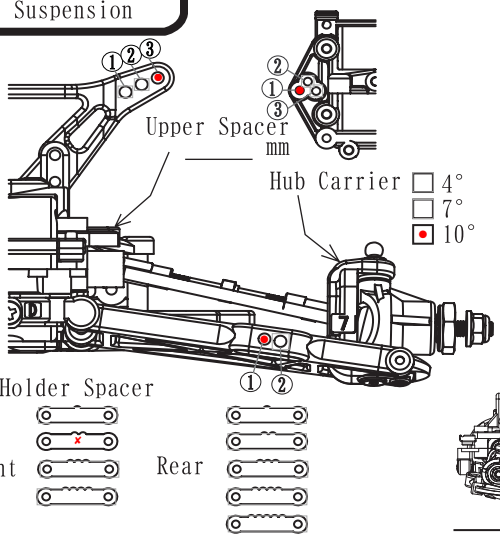

Upper Spacer ____ mm

Hub Carrier ☐ 4° ☐ 7° ☒ 10°

Sus. Holder Spacer

Front ☒ Rear

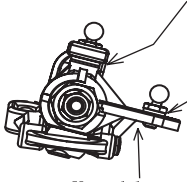

Axle Hight Spacer ☒ Up ☐ Low

Bump Steer Spacer 2 mm

Knuckle ☒ Standard ☐ Opposite

Camber Angle // °

Toe Angle // °

Sway bar None

Front Diff. ☐ Rigid ☐ Oneway ☒ Diff.

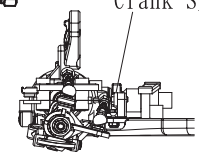

Crank Spacer 2 mm

Ride Height // mm

Shock Piston 2C

Shock Oil # 40

Shock Spring Silver Losi

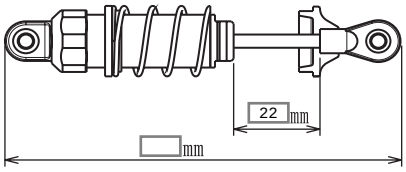

22 mm

____ mm

Rear Suspension

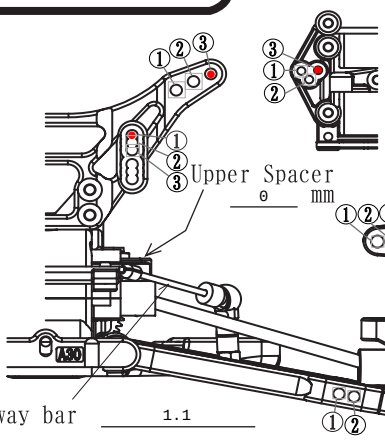

Upper Spacer 0 mm

Sus. Holder

Front ☐ BF ☐ BR

Rear ☐ A15 ☐ A25 ☒ A30

Sus. Holder Spacer

Front ☒ Rear

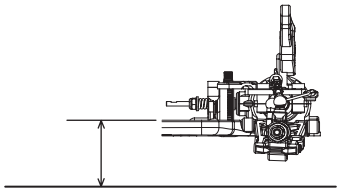

Ride Height // mm

Hub Carrier Spacer 0 mm

Hub Carrier ☒ 0° ☐ 2°

Hub Carrier Height ☐ Up ☒ Middle ☐ Down

Sway bar 1.1

Camber Angle 2 °

Shock Piston 2C

Shock Oil # 35

Shock Spring Pink Losi

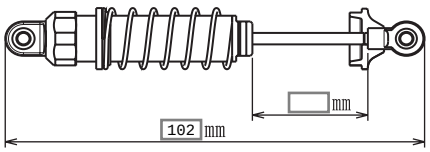

____ mm

102 mm

Tire

		Compound
Front Tire	Blockhead	Red
Rear Tire	Losi IFMAR Pin	Red
Front Inserts	Losi	
Rear Inserts	Losi	

Other

Motor Corally 9x2

Pinion/Spur 18 / 78

Wing ____

Wing Angle ☐ 0° ☐ 7° ☐ 4°

Center Shaft ☐ Oneway ☐ Direct

Slipper Sheet ☐ Red-White ☐ Red-Red ☐ White-White

Track Condition

☐ Smooth ☒ Bumpy ☐ Low Traction ☐ Med. Traction ☐ Higt Traction

☐ Dry ☐ Wet ☐ Dusty ☐ Indoor ☐ Outdoor

Spring Rate

#50	Black	#68	Blue
#55	Orange	#70	Silver
#60	Orange Yellow	#75	Light Green
#65	Yellow	#80	Green

Gear Ratio

Secondary Gear Ratio 2.5 (16:40)

	16	17	18	19	20	21	22	23	24	25
76		11.18	10.56	10.00	9.50	9.05	8.64	8.26	7.92	7.60
78	12.19	11.47	10.83	10.26	9.75	9.29	8.86	8.48	8.13	7.80

Shock Piston

Soft ⟷ Hard

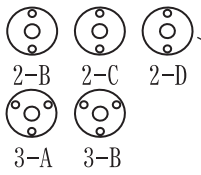

2-B 2-C 2-D

3-A 3-B

Own composition (2-1.3)

Sway Bar

1.0	Nickel
1.1	Gold
1.2	Silver
1.3	Copper
1.4	Black
1.5	Golden
1.6	Chromium

Comments

Very bumpy track, high traction
Lower rear shock: inside position 1
KMRC chassis tested
Wheelbase extended from 6mm

Published by PetitRC