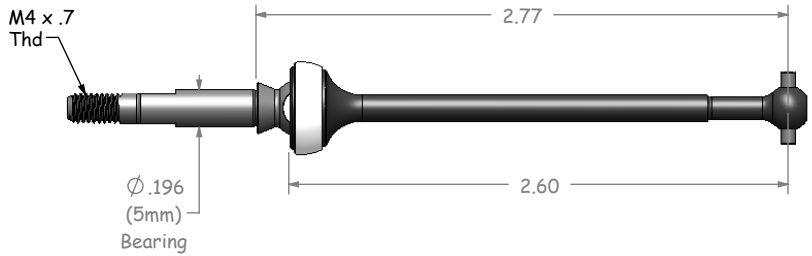

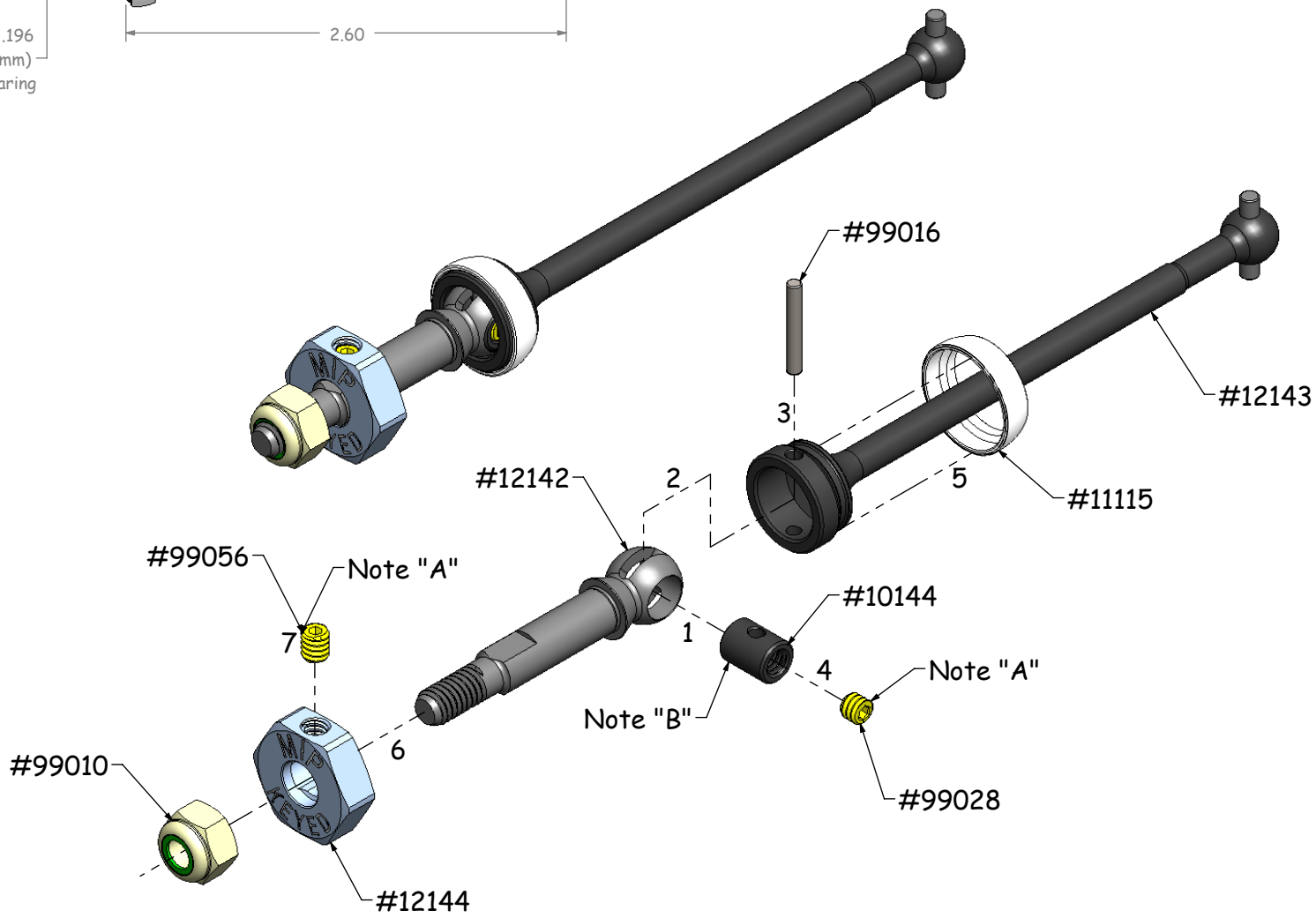

Notes:

A - Coat threads of set screws with "RED" Thread Lock Compound!
B - Use an All Purpose "Moly" Grease on moving parts!
C - Check set screws daily for loosening

Moore's Ideal Products, LLC
830. W. Golden Grove Way, Covina, California 91722 U.S.A.
ph: 626.339.9008 px: 626.966.2901 WWW.MIPONLINE.COM

P/N: 12141

TITLE: MIP C-CVD Kit, Kyosho RB5 Buggy

5 4 3 2 1