SETUP SHEET

Driver	Mason Fuller	Date	10/26/23	Track	Hobbytown Hobbyplex	Event	Practice

Track Condition: Damp, Smooth, Low Dust

Temperature: 60

FRONT

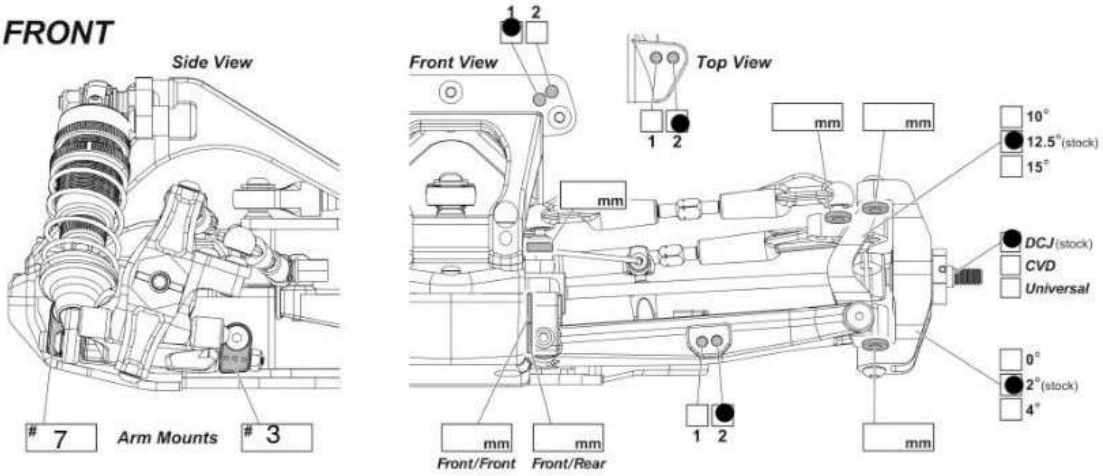

Front Shocks	
Oil wt.	40
Piston	1.6 x 2
Bladder	Emulsion
Spring	75
Notes	

Ride Height	16	mm
Droop	24	mm
Camber Angle	-1	°
Toe Angle		°
Sway Bar	1.8	mm
Shock Length		mm

REAR

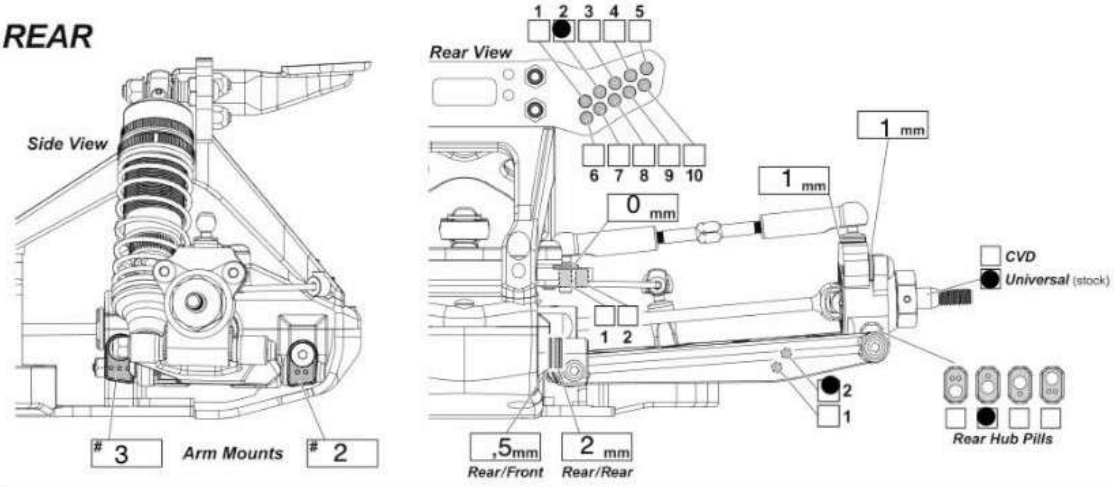

Rear Shocks	
Oil wt.	35
Piston	1.7 x 2
Bladder	Emulsion
Spring	45
Notes	

Ride Height	18	mm
Droop	28	mm
Camber Angle	-1	°
Toe Angle		°
Sway Bar	1.8	mm
Shock Length		mm

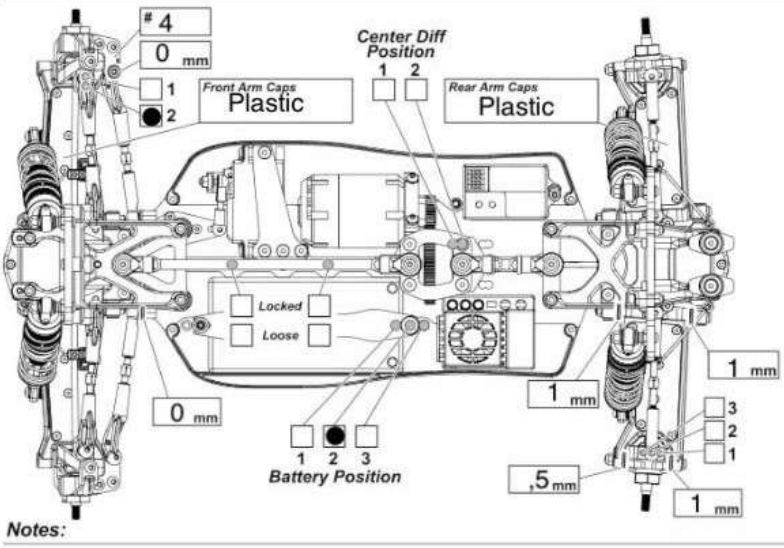

Notes:

Motor	
Brand / Model	Exalt
Spur gear	72
Pinion Gear	21

Battery	
Brand / Model	Exalt

ESC	
Brand / Model	Hobbywing

Rear Toe-In			
R/F	R/R	Toe-in	
0.5mm	0.5mm	2.0°	
0.5mm	1.0mm	2.5°	
0.5mm	1.5mm	3.0°	
0.5mm	2.0mm	3.5°	

	Front Tires	Rear Tires
Brand / Model	Smoothie 2	Smoothie 2
Compound	Silver	Silver
Insert		
Wheel		

Diff Oil	Front	Center	Rear
Brand	XTR	XTR	XTR
Oil wt.	12k	200k	7k

Gear Ratio

Spur Gear / Pinion Gear x 3.3077 = 11.34